RECORDING ACKNOWLEDGEMENTS

CORPORATE CERTIFICATION OF INTENT

KNOW TO ALL TO WHOM THESE PRESENTS MAY COME, THAT I, _____, BEING AN OFFICER FOR SMITHKLINE BEECHAM PHARMACEUTICALS, A PENNSYLVANIA CORPORATION, FOR ITSELF, IT'S SUCCESSORS AND ASSIGNS, DO HEREBY ADOPT THIS AS OUR PLAN OF LOTS AND STREETS AND/OR LAND DEVELOPMENT PLAN OF OUR PROPERTY, SITUATE IN THE TOWNSHIP OF UPPER MERION, COUNTY OF MONTGOMERY, COMMONWEALTH OF PENNSYLVANIA, AND IT IS OUR DESIRE THAT THIS PLAN BE RECORDED ACCORDING TO LAW.

_____
CORPORATE OFFICER

COMMONWEALTH OF PENNSYLVANIA:

COUNTY OF MONTGOMERY : ss

ON THE _____ DAY OF _____, 20___, BEFORE ME, THE UNDERSIGNED OFFICER, PERSONALLY APPEARED _____ KNOWN TO ME (OR SATISFACTORILY PROVEN) TO BE THE PERSON WHOSE NAME IS SUBSCRIBED TO THE WITHIN INSTRUMENT AND ACKNOWLEDGE THAT HE EXECUTED THE SAME FOR THE PURPOSES THEREIN CONTAINED.

_____
(NOTARY PUBLIC)

_____
(SEAL)

_____ _____
ATTEST CORPORATE OFFICER

_____ _____
SECRETARY (SEAL)

MCPC CERTIFICATION

MCPC No. _____

PROCESSED AND REVIEWED. A report has been prepared by the Montgomery County Planning Commission in accordance with the Municipalities Planning Code.

Certified this date _____

_____
For the Director
Montgomery County Planning Commission

TOWNSHIP ENGINEER'S REVIEW

THIS SUBDIVISION AND/OR LAND DEVELOPMENT PLAN WAS REVIEWED BY THE TOWNSHIP ENGINEER FOR THE TOWNSHIP UPPER MERION ON THIS _____ DAY OF _____, 20___.

_____P.E.
TOWNSHIP ENGINEER

BOARD OF SUPERVISORS' APPROVAL

THIS SUBDIVISION AND OR LAND DEVELOPMENT PLAN WAS APPROVED BY RESOLUTION OF THE BOARD OF SUPERVISORS OF THE TOWNSHIP OF UPPER MERION THIS _____ DAY OF _____ 20___, OF UPPER MERION THIS _____ DAY OF _____ 20___.

_____
CHAIRMAN

_____
SECRETARY

DESIGN ENGINEER CERTIFICATION

TO THE BEST OF MY KNOWLEDGE, THE PLANS ARE IN CONFORMITY WITH ENGINEERING, ZONING, BUILDING, SANITATION AND OTHER APPLICABLE UPPER MERION TOWNSHIP ORDINANCES AND REGULATIONS.

_____ _____
DESIGN ENGINEER SIGNATURE DATE

SURVEYOR'S CERTIFICATION

I HEREBY CERTIFY THAT I, (NAME) _____, AM A REGISTERED PROFESSIONAL AND SURVEYOR, LICENSED IN COMPLIANCE WITH THE LAWS OF THE COMMONWEALTH OF PENNSYLVANIA: THAT THIS IS A TRUE AND ACCURATE SURVEY MADE ON THE GROUND COMPLETED BY ME ON THE _____ DAY OF _____, 20_____ THAT ALL THE MARKERS SHOWN THEREON ACTUALLY EXIST; THAT THEIR LOCATION, SIZE, TYPE AND MATERIAL ARE ACCURATELY SHOWN; AND THAT NO ENCROACHMENTS, RIGHT-OF-WAY, OR EASEMENTS EXIST, EXCEPT AS SHOWN HEREON.

_____ _____ _____
SURVEYOR SIGNATURE DATE LICENSE NUMBER

RECORDING

RECORDED IN THE OFFICE OF THE RECORDER OF DEEDS FOR MONTGOMERY COUNTY IN NORRISTOWN, PA, THIS _____ DAY OF _____, 20___ IN PLAN BOOK _____ PAGE _____.

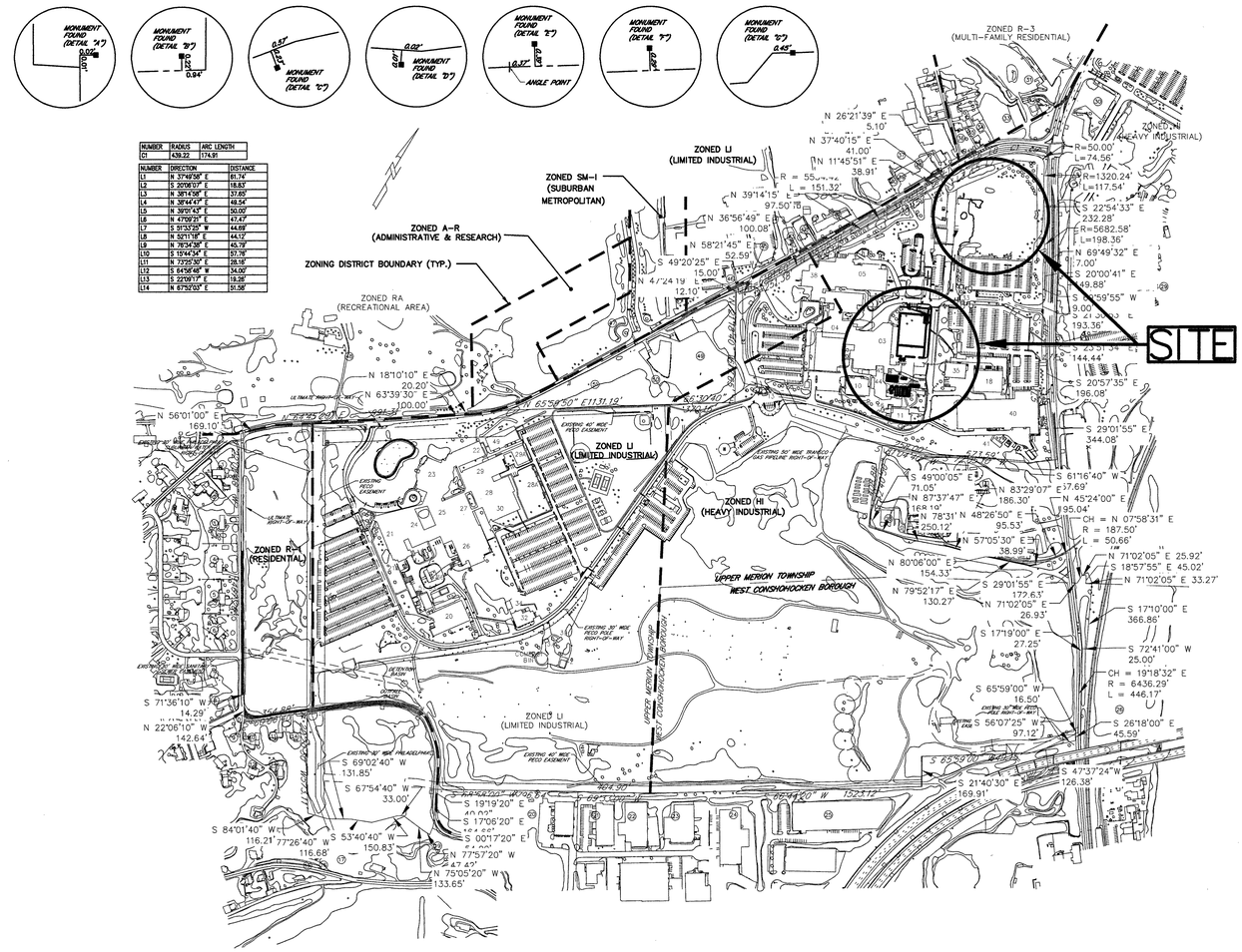

NUMBER	RADIUS	ARC LENGTH
C1	439.22	174.91

NUMBER	DIRECTION	DISTANCE
L1	N 37°40'58" E	65.74'
L2	S 20°06'07" E	18.83'
L3	N 36°14'58" E	37.65'
L4	N 36°44'47" E	49.54'
L5	N 30°05'43" E	50.00'
L6	N 47°09'25" E	47.47'
L7	S 91°37'25" W	44.69'
L8	N 52°11'18" E	44.12'
L9	N 76°54'38" E	45.78'
L10	S 10°44'34" E	57.76'
L11	N 73°25'30" E	38.18'
L12	S 64°56'48" W	34.00'
L13	S 22°09'17" E	18.26'
L14	N 67°52'00" E	51.56'

ZONING INFORMATION

ENTIRE TRACT IS IN THREE ZONING DISTRICTS: LI (LIMITED INDUSTRIAL), R-1 (RESIDENTIAL, AND HI (HEAVY INDUSTRIAL). PROPOSED IMPROVEMENTS LIE SOLELY WITHIN THE HI ZONING DISTRICT.

DATA OBTAINED FROM "UPPER MERION TOWNSHIP CODE, CHAPTER 165, ZONING & GENERAL REFERENCES" DATED 2004.

LIMITED INDUSTRIAL DISTRICT (LI)

	ZONING REQUIREMENTS	EXISTING	PROPOSED
TRACT SIZE		11,017,240 SQ. FT. 3,299,286 SQ. FT. (HI)	11,017,240 SQ. FT. 3,299,286 SQ. FT. (HI)
MAXIMUM BUILDING COVERAGE	75%	344,799 SQ. FT. (HI) (3.13%) 688,384 SQ. FT. (TOTAL) (6.25%)	380,461 SQ. FT. (HI) (3.46%) 724,045 SQ. FT. (TOTAL) (6.57%)
BUILDING HEIGHT LIMITS	80 FT.	50 FT.	50 FT.
YARD REQUIREMENTS			
MINIMUM FRONT YARD	40 FT.	29 FT. (BLDG. 38)	29 FT. (BLDG. 38)
MINIMUM REAR YARD	20 FT.	691 FT. (BLDG. 42)	691 FT. (BLDG. 42)
MINIMUM SIDE YARD	15' MIN. (40' AGGR.)	31 FT. (BLDG. 12)	31 FT. (BLDG. 12)

GREEN SPACE CALCULATIONS

(PER ARTICLE XXIX, SECTION 165-198)

REQUIRED MINIMUM GREEN AREA = NET AREA OF TRACT X 15%
= 252.92 ACRES X 15%
= 38.73 ACRES

EXISTING GREEN SPACE AREA = 187.08 ACRES (74.0%)
PROPOSED GREEN SPACE AREA = 186.57 ACRES (73.8%)

PARKING INFORMATION

EXISTING (TOTAL)
PARKING SPACE STUDY COMPLETED FEBRUARY 2008 (EAST/WEST CAMPUS) 2,309

UNDERGROUND FACILITY OWNER LIST

OWNER NAME	PHONE NUMBER	OWNER NAME	PHONE NUMBER
ABOVENET COMMUNICATIONS INC	866-859-6971	PENNSYLVANIA AMERICAN WATER	800-565-7292
AMERIGAS PROPANE LP	610-644-9100	QWEST COMMUNICATIONS	800-860-1020
AQUA PENNSYLVANIA INC	877-987-2762	RCN TELECOM SERVICES OF PHILADELPHIA	800-746-4726
AT&T ATLANTA	800-288-2747	SUNOCO PIPELINE LP	800-786-7440
AT&T LOCAL SERVICES	800-288-2747	TRANSCONTINENTAL GAS/WILLIAMS GAS	713-215-2359
CAVALIER TELEPHONE	800-291-9699	UPPER MERION TOWNSHIP	610-265-2600
CIBA SPECIALTY CHEMICALS CORP	704-587-5000	UPPER MERION TOWNSHIP UTILITY AUTHORITY	610-265-2605
COMCAST CABLE	800-266-2278	VERIZON PENNSYLVANIA INC	800-483-2000
COMCAST CABLE COMMUNICATIONS INC	800-266-2278	XO COMMUNICATIONS INC	703-547-2000
FRONTIER COMMUNICATION CTSI LLC	800-921-8101		
LEVEL 3 COMMUNICATIONS LLC	720-888-1000		
MCI/VERIZON BUSINESS	800-265-2316		
PECO ENERGY	800-494-4000		

ADJACENT OWNER INFORMATION

PROP. No.	PARCEL	NAME/ADDRESS
1	BLOCK 52 UNIT 2	MICHAEL R. KOSSEY 292 HOLSTEIN ROAD
2	BLOCK 52 UNIT 11	ALEXIS J. ELKINS 284 HOLSTEIN ROAD
3	BLOCK 52 UNIT 12	ANTHONY J. AND SARAH ABBRUZZI 931 JONES ROAD
4	BLOCK 52 UNIT 13	ERIC S. LOIEDERMAN 943 JONES ROAD
5	BLOCK 52 UNIT 14	THOMAS V. AND KATHLEEN MOHN 955 JONES ROAD
6	BLOCK 52 UNIT 15	JOYCE F. PERSOFSKY 982 MAYBERRY ROAD
7	BLOCK 52 UNIT 1	THE HAVERLY FAMILY TRUST 981 MAYBERRY ROAD
8	BLOCK 70 UNIT 51	MARINA AND MILONOV SIGIDIN 298 DIANA COURT
9	BLOCK 70 UNIT 50	LOUIS AND BARBARA IANELLI 299 DIANA COURT
10	BLOCK 52 UNIT 35	MICHAEL W. MARTIN 1001 JONES ROAD
11	BLOCK 52 UNIT 36	ELEANOR C. JACKSON 1007 JONES ROAD
12	BLOCK 52 UNIT 5	GLENN R. HOY 1005 JONES ROAD
13	BLOCK 52 UNIT 45	DAN ADNAN M. ACHEK 1009 JONES ROAD
14	BLOCK 52 UNIT 32	EVANGELINO C. AND P. CHEUNG 1011 JONES ROAD
15	BLOCK 52 UNIT 42	MICHAEL & CAREN KELMAN 316 BALLIGOMINGO ROAD
16	BLOCK 52 UNIT 43	SHARON D. ALTMAN 318 BALLIGOMINGO ROAD
17	BLOCK 52 UNIT 10	PECO ENERGY CO. BALLIGOMINGO ROAD
18	BLOCK 52 UNIT 6	VINCENT L. MORGAN & CAROL A. MICKEY 350 BALLIGOMINGO ROAD
19	BLOCK 52 UNIT 33	MARK A. AND EDITH M. MCKEE 1091 JONES ROAD
20	BLOCK 52 UNIT 7	GULPH CREEK PROPERTIES LP 390 BALLIGOMINGO ROAD
21	BLOCK 1 UNIT 19	MICHAEL S. PERLSTEIN 9 W. PORTLAND ROAD
22	BLOCK 1 UNIT 11	MATTHEY JOHNSON INC 15 PORTLAND ROAD
23	BLOCK 1 UNIT 12	MONTGOMERY CIDC 4 PORTLAND ROAD
24	BLOCK 1 UNIT 13	W. C. PARTNERS PARTNERSHIP PORTLAND ROAD
25	BLOCK 1 UNIT 20	MONTGOMERY CIDC 70 PORTLAND ROAD
26	BLOCK 1 UNIT 2	PHILADELPHIA ELECTRIC CO. 300 FRONT STREET
27	BLOCK 53 UNIT 7	COOPER'S CREEK CHEMICAL CO. 884 SCHUYLKILL RIVER ROAD
28	BLOCK 53 UNIT 15	COOPER'S CREEK CHEMICAL CO. 981 SCHUYLKILL RIVER ROAD
29	BLOCK 58 UNIT 5	LONZA INC. 900 SCHUYLKILL RIVER ROAD
30	BLOCK 58 UNIT 29	SMITHKLINE BECKMAN CORP. 300 SCHUYLKILL RIVER ROAD
31	BLOCK 59 UNIT 1	FRANCIS E. SCHULTZ JR. 640 SWEDELAND ROAD
32	BLOCK 59 UNIT 18	UPPER MERION TOWNSHIP SWEDELAND ROAD
33	BLOCK 59 UNIT 2	FRANCIS E. SCHULTZ JR. 630 SWEDELAND ROAD
34	BLOCK 59 UNIT 3	RICHARD NICOLOSI 620 SWEDELAND ROAD
35	BLOCK 59 UNIT 16	FRANCIS E. SCHULTZ JR. 616 SWEDELAND ROAD
36	BLOCK 59 UNIT 5	FRANCIS E. SCHULTZ JR. 612 SWEDELAND ROAD
37	BLOCK 54 UNIT 33	BEAROFF BROTHERS, INC. 596 SWEDELAND ROAD
38	BLOCK 54 UNIT 10	FRANCIS J. AND JOSEPH BEAROFF 486 SWEDELAND ROAD
39	BLOCK 54 UNIT 12	486 SWEDELAND ROAD
40	BLOCK 54 UNIT 11	468 SWEDELAND ROAD
41	BLOCK 54 UNIT 35	ROSE MARIE DORAZIO 468 SWEDELAND ROAD
42	BLOCK 54 UNIT 24	ROSINA ELAINE HRUSOVSKY 446 SWEDELAND ROAD
43	BLOCK 54 UNIT 21	COBOCO LIMITED 440 SWEDELAND ROAD
44	BLOCK 56 UNIT 10	COBOCO LTD. PARTNERSHIP 504 SWEDELAND ROAD
45	BLOCK 56 UNIT 7	TRI-STATE AUTO AUCTION 538 SWEDELAND ROAD
46	BLOCK 54 UNIT 9	ROVIN INC. 420 SWEDELAND ROAD
47	BLOCK 54A UNIT 7	PASQUALE PROPERTIES 1004 N. NINTH STREET KING OF PRUSSIA, PA.
48	BLOCK 54 UNIT 8	GULPH MILLS GOLF CLUB 180 SWEDELAND ROAD
49	BLOCK 53 UNIT 3	PECO ENERGY CO. REAL ESTATE DEPT.
50	BLOCK 53 UNIT 10	2301 MARKET STREET
51	BLOCK 53 UNIT 19	PHILADELPHIA, PA. 19101

PLAN SHEET INDEX

SHEET NO.	DRAWING NO.	DESCRIPTION
1.	00-00-001	LAND DEVELOPMENT PLAN
2.	00-00-002	EXSTING FEATURES PLAN
3.	00-00-003	ENABLING PHASE PLAN
4.	00-00-004	PROPOSED IMPROVEMENT PLAN
5.	00-00-005	PROPOSED GRADING PLAN
6.	00-00-006	PROPOSED RAINGARDEN PLAN
7.	00-00-007	PLAN AND PROFILE
8.	00-00-008	EROSION AND SEDIMENT CONTROL PLAN
9.	00-00-009	ENLARGED EROSION AND SEDIMENT CONTROL PLAN
10.	00-00-010	RAINGARDEN EROSION AND SEDIMENT CONTROL PLAN
11.	00-00-011	EROSION AND SEDIMENT CONTROL NOTES
12.	00-00-012	EROSION AND SEDIMENT CONTROL DETAILS
13.	00-00-013	EROSION AND SEDIMENT CONTROL DETAILS 2
14.	00-00-014	CONSTRUCTION DETAILS 1
15.	00-00-015	CONSTRUCTION DETAILS 2
16.	00-00-016	POST CONSTRUCTION STORMWATER MANAGEMENT PLAN
17.	00-00-017	ENLARGED POST CONSTRUCTION STORMWATER MANAGEMENT PLAN
18.	00-00-018	RAINGARDEN POST CONSTRUCTION STORMWATER MANAGEMENT PLAN
19.	00-00-019	POST CONSTRUCTION STORMWATER MANAGEMENT NOTES
20.	00-00-020	POST CONSTRUCTION STORMWATER MANAGEMENT NOTES AND DETAILS
21.	00-00-021	POST CONSTRUCTION STORMWATER MANAGEMENT DETAILS 1

GENERAL NOTES

1. THE PURPOSE OF THIS PLAN IS TO DEPICT A PROPOSED CENTRAL UTILITY PLANT AND OTHER ASSOCIATED IMPROVEMENTS FOR GLAXOSMITHKLINE. THE ULTIMATE FOOTPRINT OF THE BUILDING WILL BE 35,660 SQUARE FEET.
2. BOUNDARY INFORMATION FROM BOUNDARY SURVEY BY ANDERSEN ENGINEERING ASSOCIATES, INC. 2007. DATUM BASED UPON USGS (NAD88).
3. THE PROPERTY OWNER SHALL HAVE THE RESPONSIBILITY FOR THE PERPETUAL MAINTENANCE OF THE PERMANENT STORMWATER MANAGEMENT FACILITIES. NO CHANGES SHALL BE MADE TO THE STORMWATER MANAGEMENT FACILITIES OR FINISH GRADING WITHOUT PRIOR WRITTEN APPROVAL FROM THE TOWNSHIP. THE TOWNSHIP HAS THE RIGHT, BUT NOT THE OBLIGATION, TO ENTER THE PROPERTY TO PERFORM ANY REQUIRED MAINTENANCE WHICH HAS NOT BEEN PROPERLY PERFORMED IN A TIMELY MANNER. THE PROPERTY OWNER SHALL BE RESPONSIBLE FOR THE COST OF ANY MAINTENANCE WHICH WHICH IS PERFORMED BY THE TOWNSHIP. THE TOWNSHIP SHALL LIEN THE PROPERTY FOR SAID COSTS UNTIL THE TOWNSHIP HAS BEEN REIMBURSED IN FULL.
4. PUBLIC WATER AND PUBLIC SEWER PROPOSED

SUBDIVISION AND LAND DEVELOPMENT WAIVERS*

FROM SECTION 145-24.1.A.(8).1:
TO ALLOW ANDERSEN ENGINEERING ASSOCIATES TO PREPARE A LANDSCAPING PLAN INSTEAD OF A PROFESSIONAL LANDSCAPE ARCHITECT OR LANDSCAPE DESIGNER.
(WAIVER GRANTED ON APRIL 16, 2009.)

SEAL:

COMMONWEALTH OF PENNSYLVANIA
REGISTERED PROFESSIONAL ENGINEER
PETER C. ANDERSEN
PE-025246-E

ANDERSEN ENGINEERING ASSOCIATES INCORPORATED
306 NORTH FIFTH STREET, PERKASIE, PA
(215) 257-5711

FIELD BK/PG	AEA JOB NO.:	AEA FILE NO.:
-/-	5365	5365SITE

© 2004 THE GLAXOSMITHKLINE GROUP OF COMPANIES. ALL RIGHTS RESERVED. THIS DRAWING IS CONFIDENTIAL AND MAY NOT BE DISCLOSED, COPIED, ADAPTED OR REPRODUCED IN ANY FORM WHATSOEVER WITHOUT THE PRIOR WRITTEN CONSENT OF GLAXOSMITHKLINE.

NOTES | REFERENCE DRAWINGS | LEGEND

PAGE No.	DRAWING No.	TITLE

REVISION	DATE REVISED	CONTROL NUMBER

KEY PLAN

gsk do more feel better live longer

UPPER MERION R&D FACILITIES
CAPITAL PROJECTS, ENGINEERING AND DESIGN
709 SWEDELAND ROAD
KING-OF-PRUSSIA, PA 19406
(610) 270-5261

SITE: UPPER MERION
BUILDING: CENTRAL UTILITIES PLANT
FLOOR:

Note: Previous Drawing Reference can be used for old drawing numbers or any previous reference that needs to be retained.

TITLE: PROPOSED CENTRAL UTILITIES PLANT (CUP) BUILDING
SHEET TITLE: LAND DEVELOPMENT PLAN

DRN BY:	DRN BY DATE:	FILE REFERENCE:
T.L.C.	10/27/16	5365SITE
CHKD BY:	CHKD BY DATE:	DRAWING STATUS:
P.C.A.		

PROJECT REF.:
SCALE @ E1: 1" = 400'
ORIGINAL CONTRACTOR DRAWING NO.(SEE NOTE ABOVE)
LEGACY GSK DRAWING DWG NO.(SEE NOTE ABOVE)
SHEET NO.: 1 OF 21
GSK DRAWING NO.: 00-00-001
REV.:

C:\Projects\5365\5365SITE.dwg, OVERALL, 12/13/2016 1:52:45 PM, Spare

Know what's below.

Call 8-1-1 before you dig.

visit www.call811.com

Serial #

PENNSYLVANIA ACT 287 OF 1974 AS AMENDED BY ACT 121 OF 2008

REQUIRES NOTIFICATION OF EXCAVATORS, DESIGNERS, OR ANY PERSON PREPARING TO DISTURB THE EARTH'S SURFACE ANYWHERE IN THE COMMONWEALTH.

CAUTION

LOCATION, DEPTH AND ALIGNMENT OF EXISTING WATER, GAS MAINS, SEWER LINES, STORM DRAINS, TELEPHONE, ELECTRIC OR OTHER UNDERGROUND UTILITIES, FACILITIES OR APPURTENANCES--ARE NOT PRECISELY KNOWN, BUT ARE SHOWN APPROXIMATELY BASED ON SUCH INFORMATION THAT IS AVAILABLE. THE CONTRACTOR IS TO VERIFY THIS INFORMATION IN THE FIELD PRIOR TO NEW CONSTRUCTION.

WRITTEN DIMENSIONS HAVE PRIORITY OVER SCALED DIMENSIONS. ALL DIMENSIONS, ELEVATIONS, LOCATIONS AND CONDITIONS, SHALL BE VERIFIED BY THE CONTRACTOR PRIOR TO CONSTRUCTION. THE OWNER AND ANDERSEN ENGINEERING ASSOCIATES, INC. SHALL BE NOTIFIED OF ANY VARIANCE FROM THE INFORMATION SHOWN ON THE DRAWINGS.

ALL IDEAS, DESIGNS, CONCEPTS AND ARRANGEMENTS PRESENTED HERE WERE DEVELOPED FOR USE AND IN CONNECTION WITH THIS SPECIFIC PROJECT, PREPARED FOR AND TO BE PAID FOR BY THE OWNER. THESE PLANS MAY NOT BE REPRODUCED OR ALTERED WITHOUT THE EXPRESSED WRITTEN PERMISSION OF ANDERSEN ENGINEERING ASSOCIATES, INC.

LINETYPE LEGEND

EXISTING PROPERTY LINE	
ADJOINERS PROPERTY LINE	
ZONING BOUNDARY	
EXISTING RIGHT-OF-WAY LINE	
EXISTING EASEMENT LINE	
BUILDING SET BACK LINE	
EXISTING EDGE OF ROAD	
EXISTING CURB	
EXISTING CONTOUR LINE	180
EXISTING FENCE	X
EXISTING UNDERGROUND COMMUNICATIONS	C
EXISTING UNDERGROUND ELECTRIC	E
EXISTING SANITARY SEWER	S
EXISTING STORM SEWER	SS
EXISTING UNDERGROUND GAS LINE	G
EXISTING WATER LINE	W

GRAPHIC SCALE

40 0 20 40 80 160

(IN FEET)
1 inch = 40'

SEAL:

COMMONWEALTH OF PENNSYLVANIA REGISTERED PROFESSIONAL ENGINEER PETER C. ANDERSEN

ANDERSEN ENGINEERING ASSOCIATES INCORPORATED
306 NORTH FIFTH STREET, PERKASIE, PA
(215) 257-5711

FIELD BK/PG	AEA JOB NO.:	AEA FILE NO.:
-/-	5365	5365SITE

© 2004 THE GLAXOSMITHKLINE GROUP OF COMPANIES. ALL RIGHTS RESERVED. THIS DRAWING IS CONFIDENTIAL AND MAY NOT BE DISCLOSED, COPIED, ADAPTED OR REPRODUCED IN ANY FORM WHATSOEVER WITHOUT THE PRIOR WRITTEN CONSENT OF GLAXOSMITHKLINE.

NOTES | REFERENCE DRAWINGS | LEGEND

PAGE No.	DRAWING No.	TITLE

REVISION	DATE REVISED	CONTROL NUMBER

KEY PLAN

do more feel better live longer

UPPER MERION R&D FACILITIES
CAPITAL PROJECTS, ENGINEERING AND DESIGN
709 SWEDELAND ROAD
KING-OF-PRUSSIA, PA 19406
(610) 270-5261

SITE: **UPPER MERION**
BUILDING: **CENTRAL UTILITIES PLANT**
FLOOR:

Note: Previous Drawing Reference can be used for old drawing numbers or any previous reference that needs to be retained.

TITLE: **PROPOSED CENTRAL UTILITIES PLANT (CUP) BUILDING**

SHEET TITLE: **EXISTING FEATURES PLAN**

DRN BY:	DRN BY DATE:	FILE REFERENCE:
T.L.C.	10/27/16	5365SITE
CHKD BY:	CHKD BY DATE:	DRAWING STATUS:
P.C.A.		

PROJECT REF.:
SCALE @ E1: 1" = 40'
ORIGINAL CONTRACTOR DRAWING NO:(SEE NOTE ABOVE)
LEGACY GSK DRAWING DWG NO:(SEE NOTE ABOVE)
SHEET NO: 2 OF 21
GSK DRAWING NO.: **00-00-002**
REV.:

C:\Projects\5365\5365SITE.dwg EXISTING, 12/5/2016 10:43:46 AM, Spam

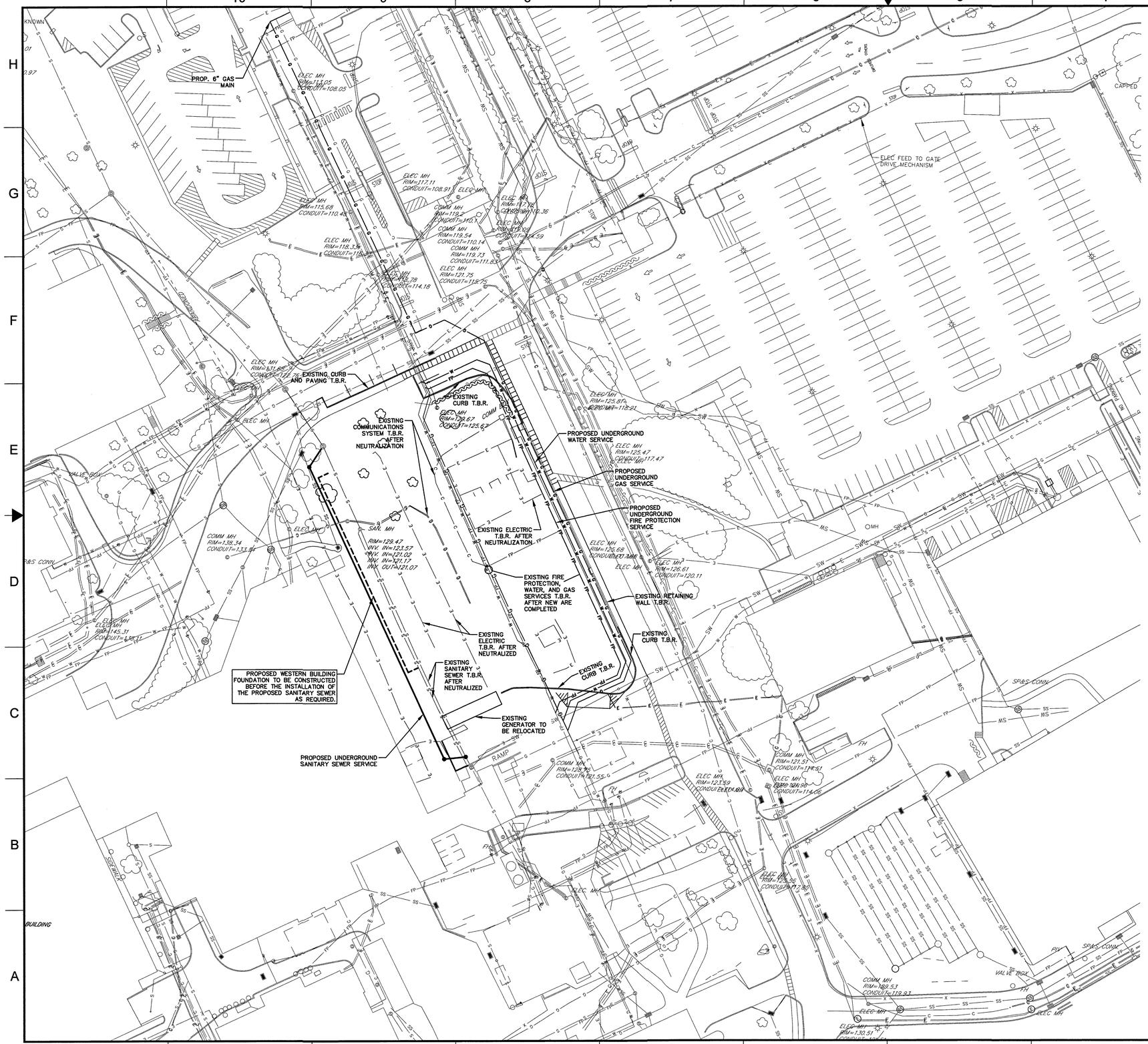

Know what's below.

Call 8-1-1 before you dig.

visit www.call811.com

Serial #

PENNSYLVANIA ACT 287 OF 1974 AS AMENDED BY ACT 121 OF 2008

REQUIRES NOTIFICATION OF EXCAVATORS, DESIGNERS, OR ANY PERSON PREPARING TO DISTURB THE EARTH'S SURFACE ANYWHERE IN THE COMMONWEALTH.

CAUTION

LOCATION, DEPTH AND ALIGNMENT OF EXISTING WATER, GAS MAINS, SEWER LINES, STORM DRAINS, TELEPHONE, ELECTRIC OR OTHER UNDERGROUND UTILITIES, FACILITIES OR APPURTENANCES–ARE NOT PRECISELY KNOWN, BUT ARE SHOWN APPROXIMATELY BASED ON SUCH INFORMATION THAT IS AVAILABLE. THE CONTRACTOR IS TO VERIFY THIS INFORMATION IN THE FIELD PRIOR TO NEW CONSTRUCTION.

WRITTEN DIMENSIONS HAVE PRIORITY OVER SCALED DIMENSIONS. ALL DIMENSIONS, ELEVATIONS, LOCATIONS AND CONDITIONS, SHALL BE VERIFIED BY THE CONTRACTOR PRIOR TO CONSTRUCTION. THE OWNER AND ANDERSEN ENGINEERING ASSOCIATES, INC. SHALL BE NOTIFIED OF ANY VARIANCE FROM THE INFORMATION SHOWN ON THE DRAWINGS.

ALL IDEAS, DESIGNS, CONCEPTS AND ARRANGEMENTS PRESENTED HERE WERE DEVELOPED FOR USE AND IN CONNECTION WITH THIS SPECIFIC PROJECT, PREPARED FOR AND TO BE PAID FOR BY THE OWNER. THESE PLANS MAY NOT BE REPRODUCED OR ALTERED WITHOUT THE EXPRESSED WRITTEN PERMISSION OF ANDERSEN ENGINEERING ASSOCIATES, INC.

© 2004 THE GLAXOSMITHKLINE GROUP OF COMPANIES. ALL RIGHTS RESERVED. THIS DRAWING IS CONFIDENTIAL AND MAY NOT BE DISCLOSED, COPIED, ADAPTED OR REPRODUCED IN ANY FORM WHATSOEVER WITHOUT THE PRIOR WRITTEN CONSENT OF GLAXOSMITHKLINE.

NOTES	REFERENCE DRAWINGS	LEGEND

PAGE No.	DRAWING No.	TITLE

LINETYPE LEGEND

EXISTING PROPERTY LINE	
ADJOINERS PROPERTY LINE	
ZONING BOUNDARY	
EXISTING RIGHT-OF-WAY LINE	
EXISTING EASEMENT LINE	
BUILDING SET BACK LINE	
EXISTING EDGE OF ROAD	
EXISTING CURB	
EXISTING CONTOUR LINE	180
EXISTING FENCE	X
EXISTING UNDERGROUND COMMUNICATIONS	C
EXISTING UNDERGROUND ELECTRIC	E
EXISTING SANITARY SEWER	S
EXISTING STORM SEWER	SS
EXISTING UNDERGROUND GAS LINE	G
EXISTING WATER LINE	W

GRAPHIC SCALE

40 0 20 40 80 160

(IN FEET)
1 inch = 40'

REVISION	DATE REVISED	CONTROL NUMBER

KEY PLAN

do more feel better live longer

UPPER MERION R&D FACILITIES
CAPITAL PROJECTS, ENGINEERING AND DESIGN
709 SWEDELAND ROAD
KING-OF-PRUSSIA, PA 19406
(610) 270-5261

SITE: **UPPER MERION**
BUILDING: **CENTRAL UTILITIES PLANT**
FLOOR:

Note: Previous Drawing Reference can be used for old drawing numbers or any previous reference that needs to be retained.

TITLE: **PROPOSED CENTRAL UTILITIES PLANT (CUP) BUILDING**
SHEET TITLE: **ENABLING PHASE PLAN**

DRN BY:	DRN BY DATE:	FILE REFERENCE:
T.L.C.	10/27/16	5365SITE
CHKD BY: P.C.A.	CHKD BY DATE:	DRAWING STATUS:

PROJECT REF.:
SCALE @ E1: 1" = 40'
ORIGINAL CONTRACTOR DRAWING NO.(SEE NOTE ABOVE)
LEGACY GSK DRAWING DWG NO.(SEE NOTE ABOVE)
SHEET NO.: 3 OF 21

SEAL: COMMONWEALTH OF PENNSYLVANIA REGISTERED PROFESSIONAL ENGINEER PETER C. ANDERSEN PE-025269-E

ANDERSEN ENGINEERING ASSOCIATES INCORPORATED
306 NORTH FIFTH STREET, PERKASIE, PA
(215) 257-5711

FIELD BK/PG	AEA JOB NO.:	AEA FILE NO.:	GSK DRAWING NO.:	REV.:
-/-	5365	5365SITE	00-00-003	

C:\Projects\5365\5365SITE.dwg, ENABLING, 12/8/2016 2:23:25 PM, Scare

GRAPHIC SCALE

60 0 30 60 120 240

(IN FEET)
1 inch = 60'

LINETYPE LEGEND

EXISTING PROPERTY LINE	
ADJOINERS PROPERTY LINE	
ZONING BOUNDARY	
EXISTING RIGHT-OF-WAY LINE	
EXISTING EASEMENT LINE	
BUILDING SET BACK LINE	
EXISTING EDGE OF ROAD	
EXISTING CURB	
EXISTING CONTOUR LINE	180
EXISTING FENCE	X X
EXISTING UNDERGROUND COMMUNICATIONS	C C
EXISTING UNDERGROUND ELECTRIC	E E
EXISTING SANITARY SEWER	S S S
EXISTING STORM SEWER	SS SS
EXISTING UNDERGROUND GAS LINE	G G
EXISTING FIRE PROTECTION LINE	FP FP

811

Know what's below.

Call 8-1-1 before you dig.

visit www.call811.com

Serial #

PENNSYLVANIA ACT 287 OF 1974 AS AMENDED BY ACT 121 OF 2008

REQUIRES NOTIFICATION OF EXCAVATORS, DESIGNERS, OR ANY PERSON PREPARING TO DISTURB THE EARTH'S SURFACE ANYWHERE IN THE COMMONWEALTH.

CAUTION

LOCATION, DEPTH AND ALIGNMENT OF EXISTING WATER, GAS MAINS, SEWER LINES, STORM DRAINS, TELEPHONE, ELECTRIC OR OTHER UNDERGROUND UTILITIES, FACILITIES OR APPURTENANCES--ARE NOT PRECISELY KNOWN, BUT ARE SHOWN APPROXIMATELY BASED ON SUCH INFORMATION THAT IS AVAILABLE. THE CONTRACTOR IS TO VERIFY THIS INFORMATION IN THE FIELD PRIOR TO NEW CONSTRUCTION.

WRITTEN DIMENSIONS HAVE PRIORITY OVER SCALED DIMENSIONS. ALL DIMENSIONS, ELEVATIONS, LOCATIONS AND CONDITIONS, SHALL BE VERIFIED BY THE CONTRACTOR PRIOR TO CONSTRUCTION. THE OWNER AND ANDERSEN ENGINEERING ASSOCIATES, INC. SHALL BE NOTIFIED OF ANY VARIANCE FROM THE INFORMATION SHOWN ON THE DRAWINGS.

ALL IDEAS, DESIGNS, CONCEPTS AND ARRANGEMENTS PRESENTED HERE WERE DEVELOPED FOR USE AND IN CONNECTION WITH THIS SPECIFIC PROJECT, PREPARED FOR AND TO BE PAID FOR BY THE OWNER. THESE PLANS MAY NOT BE REPRODUCED OR ALTERED WITHOUT THE EXPRESSED WRITTEN PERMISSION OF ANDERSEN ENGINEERING ASSOCIATES, INC.

© 2004 THE GLAXOSMITHKLINE GROUP OF COMPANIES. ALL RIGHTS RESERVED. THIS DRAWING IS CONFIDENTIAL AND MAY NOT BE DISCLOSED, COPIED, ADAPTED OR REPRODUCED IN ANY FORM WHATSOEVER WITHOUT THE PRIOR WRITTEN CONSENT OF GLAXOSMITHKLINE.

NOTES | REFERENCE DRAWINGS | LEGEND

PAGE No.	DRAWING No.	TITLE

REVISION	DATE REVISED	CONTROL NUMBER

KEY PLAN

gsk do more feel better live longer

UPPER MERION R&D FACILITIES
CAPITAL PROJECTS, ENGINEERING AND DESIGN
709 SWEDELAND ROAD
KING-OF-PRUSSIA, PA 19406
(610) 270-5261

SITE: **UPPER MERION**
BUILDING: **CENTRAL UTILITIES PLANT**
FLOOR:

Note: Previous Drawing Reference can be used for old drawing numbers or any previous reference that needs to be retained.

TITLE: **PROPOSED CENTRAL UTILITIES PLANT (CUP) BUILDING**
SHEET TITLE: **PROPOSED IMPROVEMENTS PLAN**

DRN BY:	DRN BY DATE:	FILE REFERENCE:
T.L.C.	10/27/16	5365SITE
CHKD BY:	CHKD BY DATE:	DRAWING STATUS:
P.C.A.		

PROJECT REF.:
SCALE @ E1: 1" = 60'
ORIGINAL CONTRACTOR DRAWING NO.(SEE NOTE ABOVE)
LEGACY GSK DRAWING DWG NO.(SEE NOTE ABOVE)
SHEET NO: 4 OF 21
GSK DRAWING NO.: **00-00-004**
REV.:

SEAL:

COMMONWEALTH OF PENNSYLVANIA
REGISTERED PROFESSIONAL
PETER C. ANDERSEN
ENGINEER

ANDERSEN ENGINEERING ASSOCIATES INCORPORATED
306 NORTH FIFTH STREET, PERKASIE, PA
(215) 257-5711

FIELD BK/PG	AEA JOB NO.:	AEA FILE NO.:
-/-	5365	5365SITE

C:\Projects\5365\5365SITE.dwg, IMPROVEMENTS, 12/9/2016 10:18:32 AM, Spare

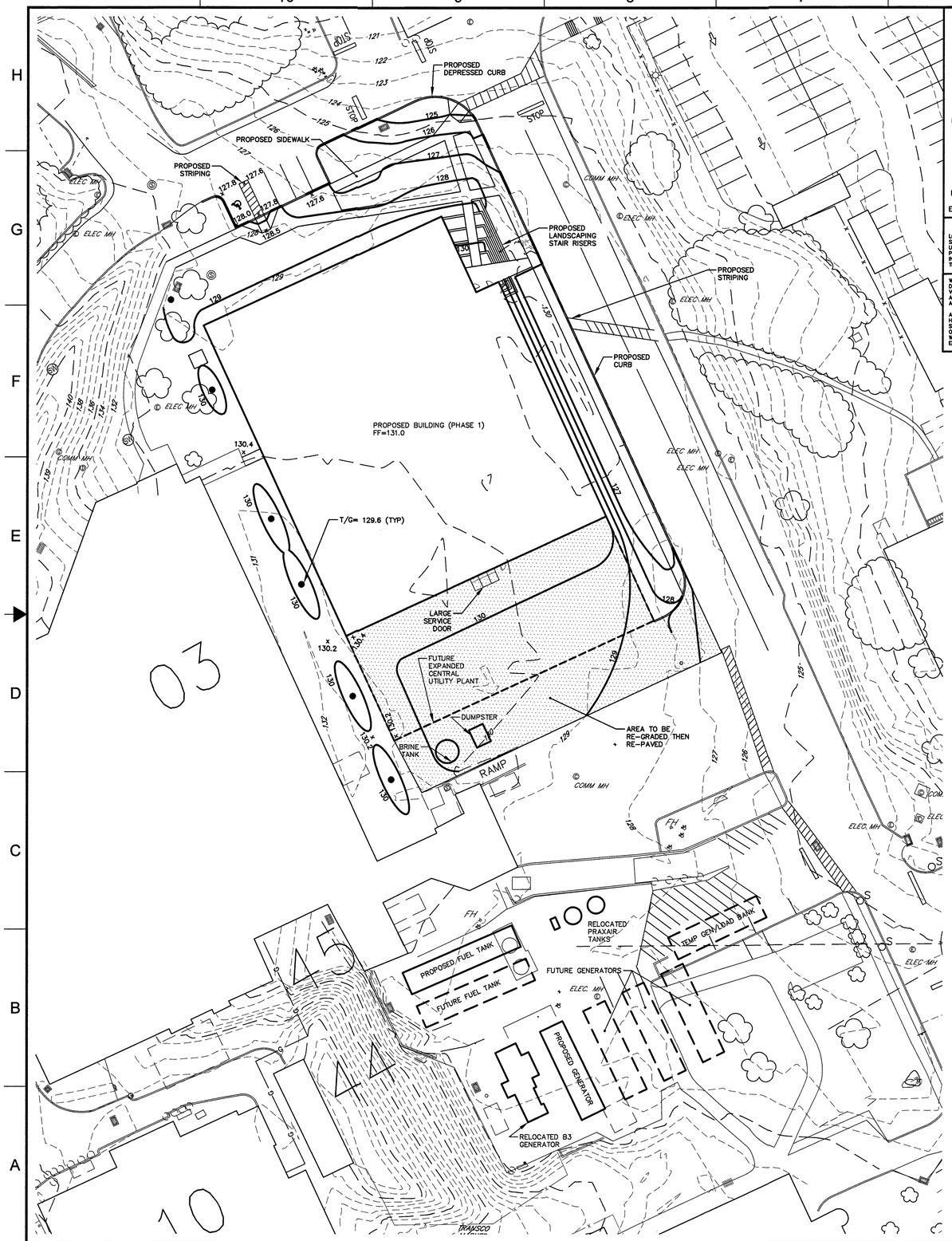

Know what's below.

Call 8-1-1 before you dig.

visit www.call811.com

Serial #

PENNSYLVANIA ACT 287 OF 1974 AS AMENDED BY ACT 121 OF 2008

REQUIRES NOTIFICATION OF EXCAVATORS, DESIGNERS, OR ANY PERSON PREPARING TO DISTURB THE EARTH'S SURFACE ANYWHERE IN THE COMMONWEALTH.

CAUTION

LOCATION, DEPTH AND ALIGNMENT OF EXISTING WATER, GAS MAINS, SEWER LINES, STORM DRAINS, TELEPHONE, ELECTRIC OR OTHER UNDERGROUND UTILITIES, FACILITIES OR APPURTENANCES--ARE NOT PRECISELY KNOWN, BUT ARE SHOWN APPROXIMATELY BASED ON SUCH INFORMATION THAT IS AVAILABLE. THE CONTRACTOR IS TO VERIFY THIS INFORMATION IN THE FIELD PRIOR TO NEW CONSTRUCTION.

WRITTEN DIMENSIONS HAVE PRIORITY OVER SCALED DIMENSIONS. ALL DIMENSIONS, ELEVATIONS, LOCATIONS AND CONDITIONS, SHALL BE VERIFIED BY THE CONTRACTOR PRIOR TO CONSTRUCTION. THE OWNER AND ANDERSEN ENGINEERING ASSOCIATES, INC. SHALL BE NOTIFIED OF ANY VARIANCE FROM THE INFORMATION SHOWN ON THE DRAWINGS.

ALL IDEAS, DESIGNS, CONCEPTS AND ARRANGEMENTS PRESENTED HERE WERE DEVELOPED FOR USE AND IN CONNECTION WITH THIS SPECIFIC PROJECT, PREPARED FOR AND TO BE PAID FOR BY THE OWNER. THESE PLANS MAY NOT BE REPRODUCED OR ALTERED WITHOUT THE EXPRESSED WRITTEN PERMISSION OF ANDERSEN ENGINEERING ASSOCIATES, INC.

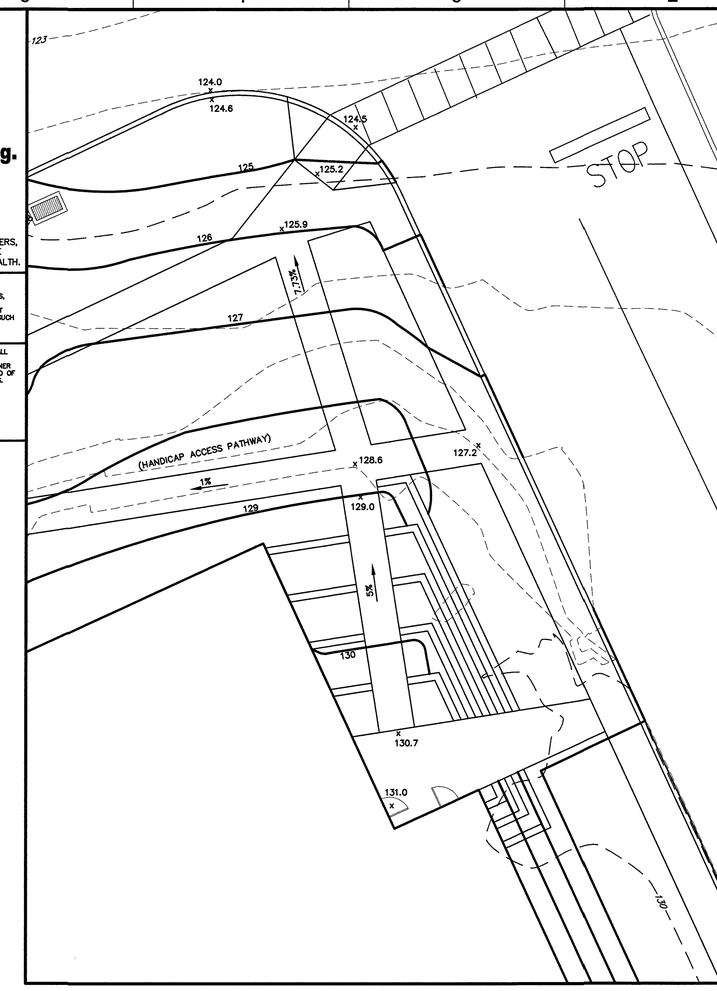

ENLARGED SIDEWALK AND RAMP

SCALE: 1" = 10'

LINETYPE LEGEND

EXISTING PROPERTY LINE	
ADJOINERS PROPERTY LINE	
ZONING BOUNDARY	
EXISTING RIGHT-OF-WAY LINE	
EXISTING EASEMENT LINE	
BUILDING SET BACK LINE	
EXISTING EDGE OF ROAD	
EXISTING CURB	
EXISTING CONTOUR LINE	180
EXISTING FENCE	X
EXISTING UNDERGROUND COMMUNICATIONS	C
EXISTING UNDERGROUND ELECTRIC	E
EXISTING SANITARY SEWER	S
EXISTING STORM SEWER	SS
EXISTING UNDERGROUND GAS LINE	G
EXISTING FIRE PROTECTION LINE	FP

GRAPHIC SCALE

30 0 15 30 60 120

(IN FEET)
1 inch = 30'

SEAL:

COMMONWEALTH OF PENNSYLVANIA REGISTERED PROFESSIONAL ENGINEER PETER C. ANDERSEN PE-025269-E

ANDERSEN ENGINEERING ASSOCIATES INCORPORATED
306 NORTH FIFTH STREET, PERKASIE, PA
(215) 257-5711

FIELD BK/PG	AEA JOB NO.:	AEA FILE NO.:
-/-	5365	5365SITE

© 2004 THE GLAXOSMITHKLINE GROUP OF COMPANIES. ALL RIGHTS RESERVED. THIS DRAWING IS CONFIDENTIAL AND MAY NOT BE DISCLOSED, COPIED, ADAPTED OR REPRODUCED IN ANY FORM WHATSOEVER WITHOUT THE PRIOR WRITTEN CONSENT OF GLAXOSMITHKLINE

NOTES | REFERENCE DRAWINGS | LEGEND

PAGE No.	DRAWING No.	TITLE

REVISION	DATE REVISED	CONTROL NUMBER

KEY PLAN

do more feel better live longer

UPPER MERION R&D FACILITIES
CAPITAL PROJECTS, ENGINEERING AND DESIGN
709 SWEDELAND ROAD
KING-OF-PRUSSIA, PA 19406
(610) 270-5261

SITE: **UPPER MERION**
BUILDING: **CENTRAL UTILITIES PLANT**
FLOOR:

Note: Previous Drawing Reference can be used for old drawing numbers or any previous reference that needs to be retained.

TITLE: **PROPOSED CENTRAL UTILITIES PLANT (CUP) BUILDING**
SHEET TITLE: **PROPOSED GRADING PLAN**

DRN BY:	DRN BY DATE:	FILE REFERENCE:
T.L.C.	10/27/16	5365SITE
CHKD BY: P.C.A.	CHKD BY DATE:	DRAWING STATUS:

PROJECT REF.:
SCALE @ E1: 1" = 30'
ORIGINAL CONTRACTOR DRAWING NO.(SEE NOTE ABOVE):
LEGACY GSK DRAWING DWG NO.(SEE NOTE ABOVE):
SHEET NO: 5 OF 21
GSK DRAWING NO.: **00-00-005**
REV.:

C:\Projects\5365\5365SITE.dwg, PROP GRADING, 12/6/2016 10:17:28 AM, Spare

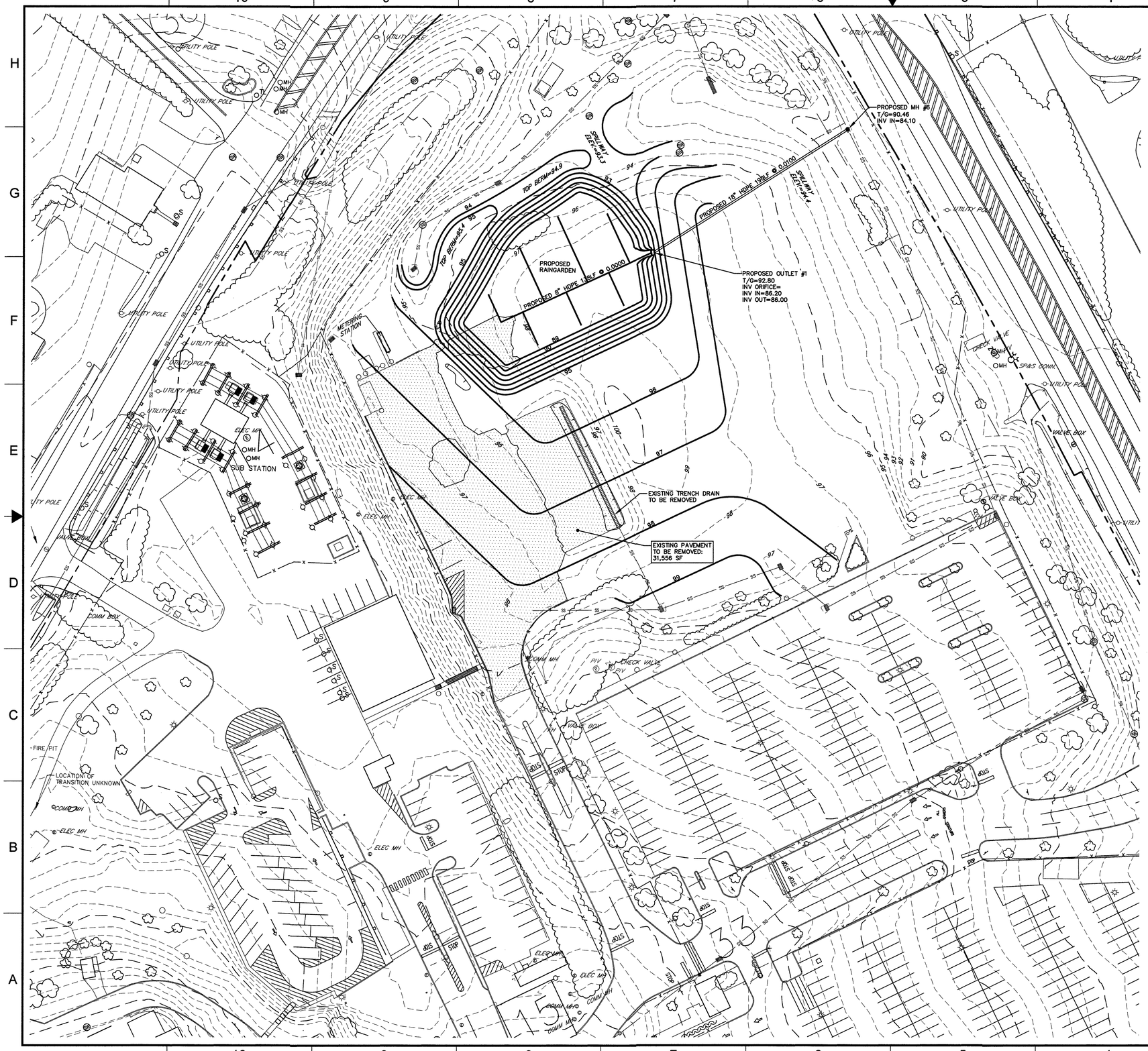

Know what's below.

Call 8-1-1 before you dig.

visit www.call811.com

Serial #

PENNSYLVANIA ACT 287 OF 1974 AS AMENDED BY ACT 121 OF 2008

REQUIRES NOTIFICATION OF EXCAVATORS, DESIGNERS, OR ANY PERSON PREPARING TO DISTURB THE EARTH'S SURFACE ANYWHERE IN THE COMMONWEALTH.

CAUTION

LOCATION, DEPTH AND ALIGNMENT OF EXISTING WATER, GAS MAINS, SEWER LINES, STORM DRAINS, TELEPHONE, ELECTRIC OR OTHER UNDERGROUND UTILITIES, FACILITIES OR APPURTENANCES—ARE NOT PRECISELY KNOWN, BUT ARE SHOWN APPROXIMATELY BASED ON SUCH INFORMATION THAT IS AVAILABLE. THE CONTRACTOR IS TO VERIFY THIS INFORMATION IN THE FIELD PRIOR TO NEW CONSTRUCTION.

WRITTEN DIMENSIONS HAVE PRIORITY OVER SCALED DIMENSIONS. ALL DIMENSIONS, ELEVATIONS, LOCATIONS AND CONDITIONS, SHALL BE VERIFIED BY THE CONTRACTOR PRIOR TO CONSTRUCTION. THE OWNER AND ANDERSEN ENGINEERING ASSOCIATES, INC. SHALL BE NOTIFIED OF ANY VARIANCE FROM THE INFORMATION SHOWN ON THE DRAWINGS.

ALL IDEAS, DESIGNS, CONCEPTS AND ARRANGEMENTS PRESENTED HERE WERE DEVELOPED FOR USE AND IN CONNECTION WITH THIS SPECIFIC PROJECT, PREPARED FOR AND TO BE PAID FOR BY THE OWNER. THESE PLANS MAY NOT BE REPRODUCED OR ALTERED WITHOUT THE EXPRESSED WRITTEN PERMISSION OF ANDERSEN ENGINEERING ASSOCIATES, INC.

© 2004 THE GLAXOSMITHKLINE GROUP OF COMPANIES. ALL RIGHTS RESERVED. THIS DRAWING IS CONFIDENTIAL AND MAY NOT BE DISCLOSED, COPIED, AMPIFIED OR REPRODUCED IN ANY FORM WHATSOEVER WITHOUT THE PRIOR WRITTEN CONSENT OF GLAXOSMITHKLINE.

NOTES	REFERENCE DRAWINGS	LEGEND

PAGE No.	DRAWING No.	TITLE

REVISION	DATE REVISED	CONTROL NUMBER

KEY PLAN

LINETYPE LEGEND

EXISTING PROPERTY LINE	
ADJOINERS PROPERTY LINE	
ZONING BOUNDARY	
EXISTING RIGHT-OF-WAY LINE	
EXISTING EASEMENT LINE	
BUILDING SET BACK LINE	
EXISTING EDGE OF ROAD	
EXISTING CURB	
EXISTING CONTOUR LINE	180
EXISTING FENCE	X X
EXISTING UNDERGROUND COMMUNICATIONS	C C
EXISTING UNDERGROUND ELECTRIC	E E
EXISTING SANITARY SEWER	S S S
EXISTING STORM SEWER	SS SS
EXISTING UNDERGROUND GAS LINE	G G
EXISTING FIRE PROTECTION LINE	FP FP

GRAPHIC SCALE

40 0 20 40 80 160

(IN FEET)
1 inch = 40'

do more
feel better
live longer

UPPER MERION R&D FACILITIES
CAPITAL PROJECTS, ENGINEERING AND DESIGN
709 SWEDELAND ROAD
KING-OF-PRUSSIA, PA 19406
(610) 270-5261

SITE: **UPPER MERION**
BUILDING: **CENTRAL UTILITIES PLANT**
FLOOR:

Note: Previous Drawing Reference can be used for old drawing numbers or any previous reference that needs to be retained.

TITLE: **PROPOSED CENTRAL UTILITIES PLANT (CUP) BUILDING**
SHEET TITLE: **PROPOSED RAINGARDEN GRADING PLAN**

DRN BY:	DRN BY DATE:	FILE REFERENCE:
T.L.C.	10/27/16	5365SITE
CHKD BY: P.C.A.	CHKD BY DATE:	DRAWING STATUS:

PROJECT REF.:
ORIGINAL CONTRACTOR DRAWING NO:(SEE NOTE ABOVE)
LEGACY GSK DRAWING DWG NO:(SEE NOTE ABOVE)
SCALE @ E1: 1" = 40'
SHEET NO: 6 OF 21
GSK DRAWING NO.: **00-00-006**
REV.:

SEAL:

COMMONWEALTH OF PENNSYLVANIA
REGISTERED PROFESSIONAL
PETER C. ANDERSEN
ENGINEER
No. PE-025259-E

ANDERSEN ENGINEERING ASSOCIATES INCORPORATED
306 NORTH FIFTH STREET, PERKASIE, PA
(215) 257-5711

FIELD BK/PG	AEA JOB NO.:	AEA FILE NO.:
-/-	5365	5365SITE

C:\Projects\5365\5365SITE.dwg, RAINGARDEN, 12/14/2016 4:09:13 PM, Spare

© 2004 THE GLAXOSMITHKLINE GROUP OF COMPANIES. ALL RIGHTS RESERVED. THIS DRAWING IS CONFIDENTIAL AND MAY NOT BE DISCLOSED, COPIED, ADAPTED OR REPRODUCED IN ANY FORM WHATSOEVER WITHOUT THE PRIOR WRITTEN CONSENT OF GLAXOSMITHKLINE.

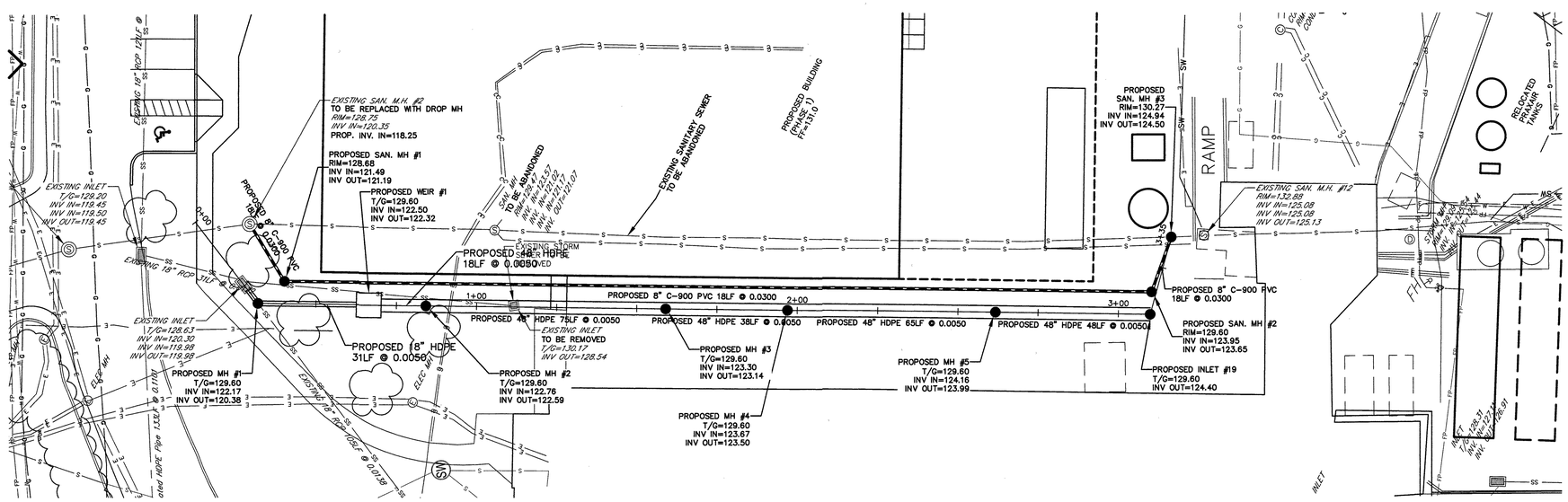

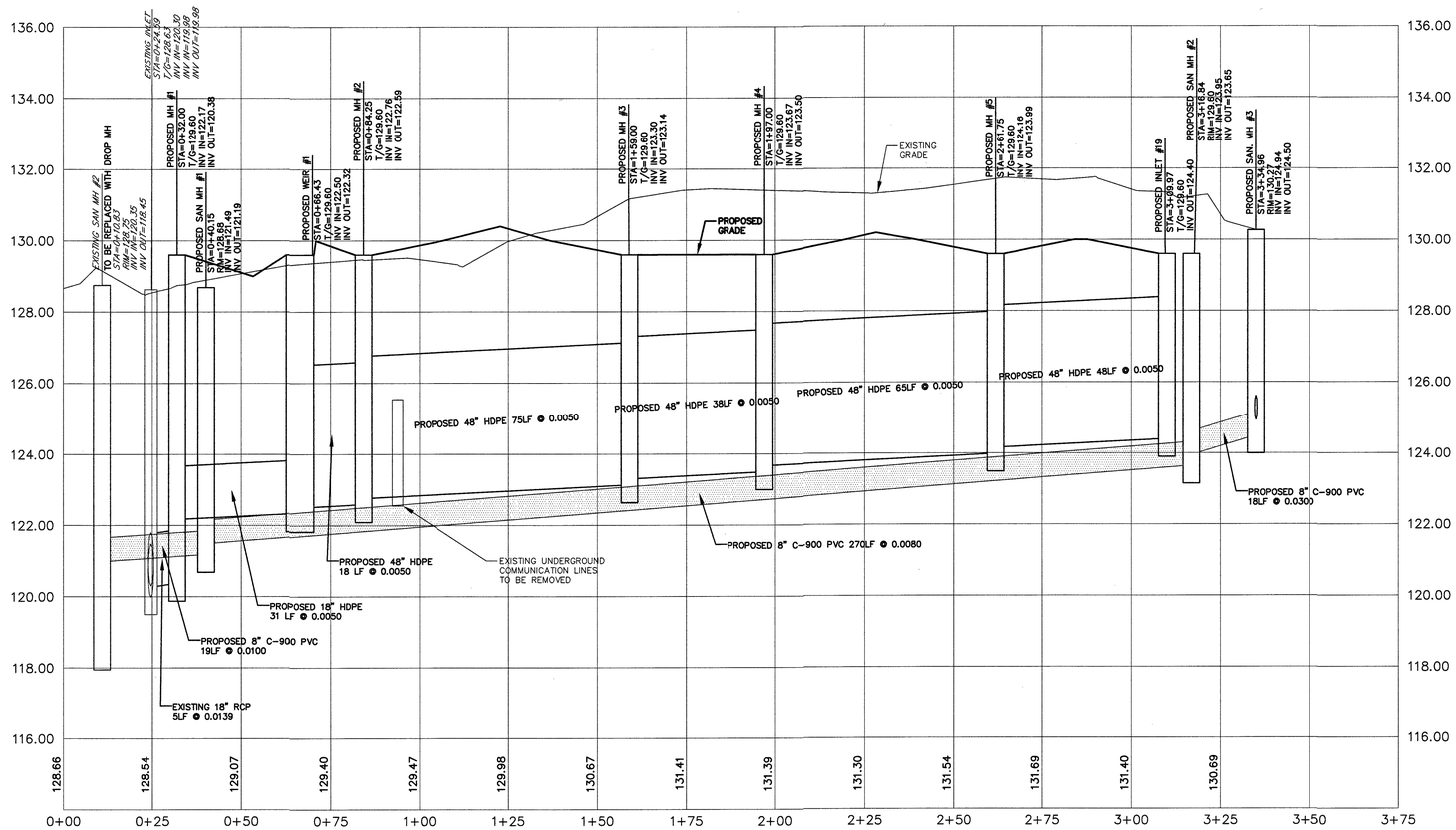

0 20' 40'

SCALE: 1"=20' HORIZONTAL
1"=2' VERTICAL

NOTES	REFERENCE DRAWINGS	LEGEND

PAGE No.	DRAWING No.	TITLE

REVISION	DATE REVISED	CONTROL NUMBER

KEY PLAN

do more feel better live longer

UPPER MERION R&D FACILITIES
CAPITAL PROJECTS, ENGINEERING AND DESIGN
709 SWEDELAND ROAD
KING-OF-PRUSSIA, PA 19406
(610) 270-5261

SITE: **UPPER MERION**
BUILDING: **CENTRAL UTILITIES PLANT**
FLOOR:

Note: Previous Drawing Reference can be used for old drawing numbers or any previous reference that needs to be retained.

TITLE: **PROPOSED CENTRAL UTILITIES PLANT (CUP) BUILDING**
SHEET TITLE: **PLAN AND PROFILE**

SEAL: COMMONWEALTH OF PENNSYLVANIA REGISTERED PROFESSIONAL ENGINEER PETER C. ANDERSEN NO. 025268-E

ANDERSEN ENGINEERING ASSOCIATES INCORPORATED
306 NORTH FIFTH STREET, PERKASIE, PA
(215) 257-5711

DRN BY:	DRN BY DATE:	FILE REFERENCE:
T.L.C.	10/27/16	5365SITE
CHKD BY: P.C.A.	CHKD BY DATE:	DRAWING STATUS:

PROJECT REF.:
SCALE @ E1: 1" = 20'
ORIGINAL CONTRACTOR DRAWING NO:(SEE NOTE ABOVE)
LEGACY GSK DRAWING DWG NO:(SEE NOTE ABOVE)
SHEET NO: 7 OF 21

FIELD BK/PG	AEA JOB NO.:	AEA FILE NO.:
-/-	5365	5365SITE

GSK DRAWING NO.: **00-00-007**
REV.:

C:\Projects\5365\5365SITE.dwg, PROP PROFILE, 12/9/2016 10:15:58 AM, Spare

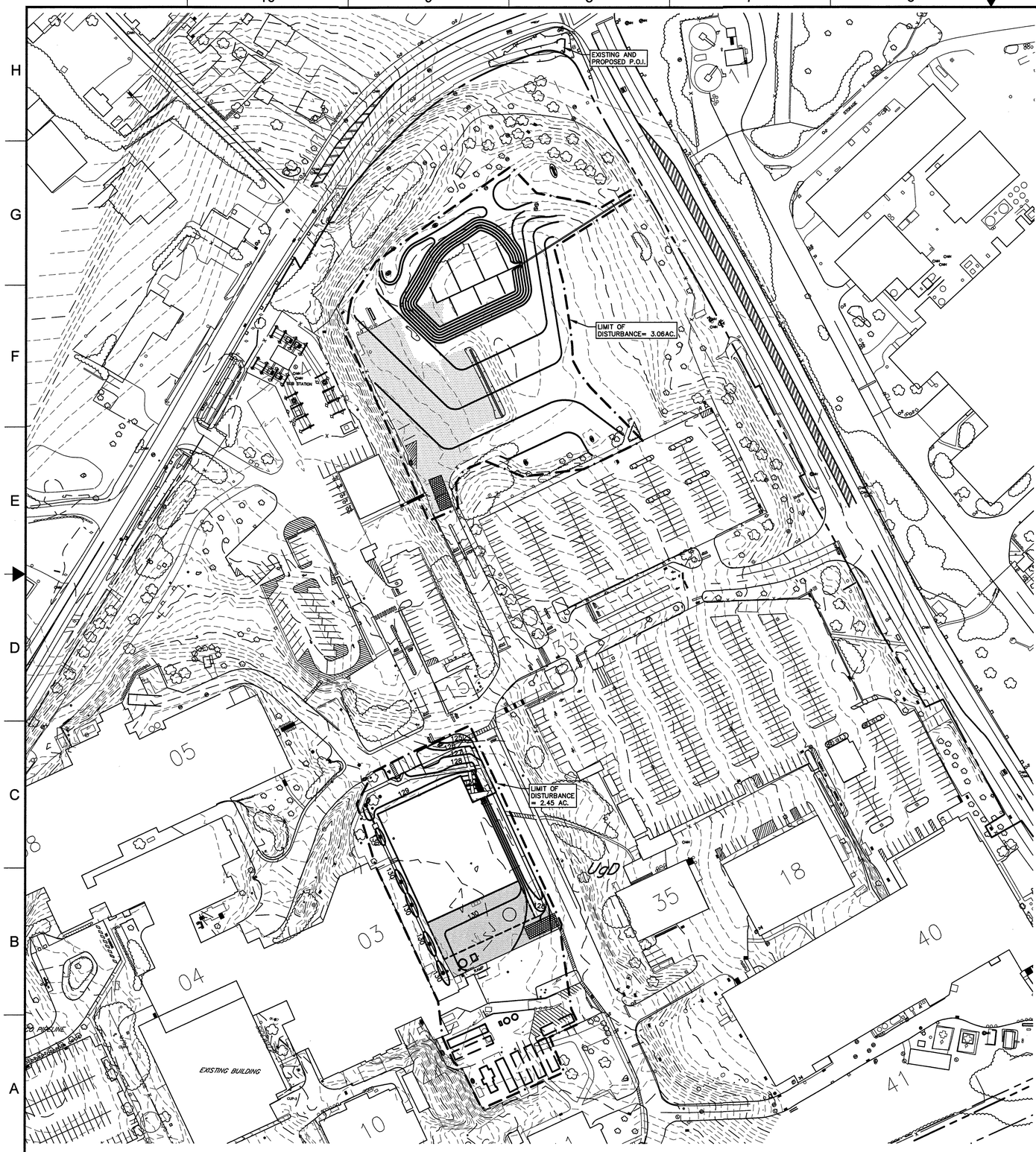

NOTE:
SEE ENLARGED PLANS FOR E&S BMPs

LEGEND:

- EXISTING CONTOURS
- EXISTING WOODS
- EXISTING BRUSH
- EXISTING RIGHT-OF-WAY LINE
- EXISTING FENCE
- PROPOSED FENCE
- EXISTING EDGE OF PAVEMENT
- EXISTING LIGHT
- EXISTING UNDERGROUND COMMUNICATIONS
- EXISTING UNDERGROUND ELECTRIC
- EXISTING UNDERGROUND GAS LINE
- EXISTING WATER LINE
- PROPOSED CONTOUR
- EXISTING CURB
- PROPOSED CURB
- PROPOSED FLUSH CURB
- EXISTING PAINT STRIPING
- PROPOSED PAINT STRIPING
- EXISTING SANITARY SEWER
- EXISTING STORM SEWER, MANHOLE AND INLET
- PROPOSED STORM SEWER, MANHOLE AND INLET
- EXISTING SIDEWALK
- PROPOSED SIDEWALK
- COMPOST SILT SOCK WITH SIZE
- WATERSHED/STORMWATER MANAGEMENT LINE
- LIMIT OF DISTURBANCE
- NPDES BOUNDARY LINE
- SOILS BOUNDARY LINE
- EXISTING PAVEMENT TO BE REPLACED
- PROPOSED PAVEMENT
- EXISTING PAVEMENT CONVERTED TO LANDSCAPING

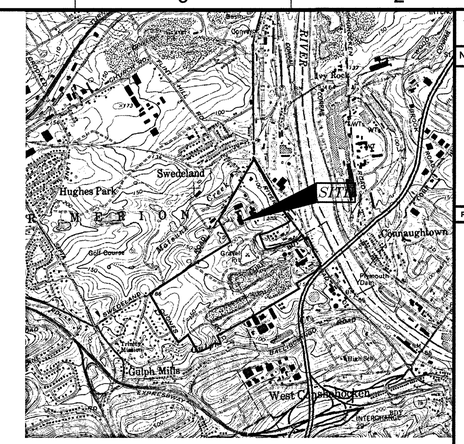

USGS LOCATION MAP
SOURCE: NORRISTOWN, PA QUAD
SCALE: 1"=2000'

SCHUYLKILL RIVER – CHAPTER 93 CLASS WWF, MF
EXISTING USE – WWF, MF

SOILS MAP
SCALE: 1"=1000'
SOURCE: USDA NRCS WEB SOIL SURVEY

SCHUYKILL RIVER – CHAPTER 93 CLASS WWF, MF
EXISTING USE – WWF, MF
(NO HQ OR EV WATERSHEDS)

GRAPHIC SCALE
80 0 40 80 160 320
(IN FEET)
1 inch = 80'

SEAL:

COMMONWEALTH OF PENNSYLVANIA
REGISTERED PROFESSIONAL ENGINEER
PETER C. ANDERSEN
ENGINEER NO. 032268-E

ANDERSEN ENGINEERING ASSOCIATES INCORPORATED
306 NORTH FIFTH STREET, PERKASIE, PA
(215) 257-5711

FIELD BK/PG	AEA JOB NO.:	AEA FILE NO.:
-/-	5365	5365SITE

© 2004 THE GLAXOSMITHKLINE GROUP OF COMPANIES. ALL RIGHTS RESERVED. THIS DRAWING IS CONFIDENTIAL AND MAY NOT BE DISCLOSED, COPIED, ADAPTED OR REPRODUCED IN ANY FORM WHATSOEVER WITHOUT THE PRIOR WRITTEN CONSENT OF GLAXOSMITHKLINE

NOTES	REFERENCE DRAWINGS	LEGEND

PAGE No.	DRAWING No.	TITLE

REVISION	DATE REVISED	CONTROL NUMBER

KEY PLAN

gsk do more feel better live longer

UPPER MERION R&D FACILITIES
CAPITAL PROJECTS, ENGINEERING AND DESIGN
709 SWEDELAND ROAD
KING-OF-PRUSSIA, PA 19406
(610) 270-5261

SITE: UPPER MERION
BUILDING: CENTRAL UTILITIES PLANT
FLOOR:

Note: Previous Drawing Reference can be used for old drawing numbers or any previous reference that needs to be retained.

TITLE: PROPOSED CENTRAL UTILITIES PLANT (CUP) BUILDING
SHEET TITLE: OVERALL EROSION AND SEDIMENT CONTROL PLAN

DRN BY:	DRN BY DATE:	FILE REFERENCE:
T.L.C.	10/27/16	5365SITE
CHKD BY: P.C.A.	CHKD BY DATE:	DRAWING STATUS:

PROJECT REF.:
SCALE @ E1: 1" = 80'
ORIGINAL CONTRACTOR DRAWING NO.(SEE NOTE ABOVE):
LEGACY GSK DRAWING DWG NO.(SEE NOTE ABOVE):
SHEET NO: 8 OF 21
GSK DRAWING NO.: 00-00-008
REV.:

C:\Projects\5365\5365SITE.dwg R15, 12/9/2016 10:11:56 AM, Spare

© 2004 THE GLAXOSMITHKLINE GROUP OF COMPANIES. ALL RIGHTS RESERVED. THIS DRAWING IS CONFIDENTIAL AND MAY NOT BE DISCLOSED, COPIED, ADAPTED OR REPRODUCED IN ANY FORM WHATSOEVER WITHOUT THE PRIOR WRITTEN CONSENT OF GLAXOSMITHKLINE.

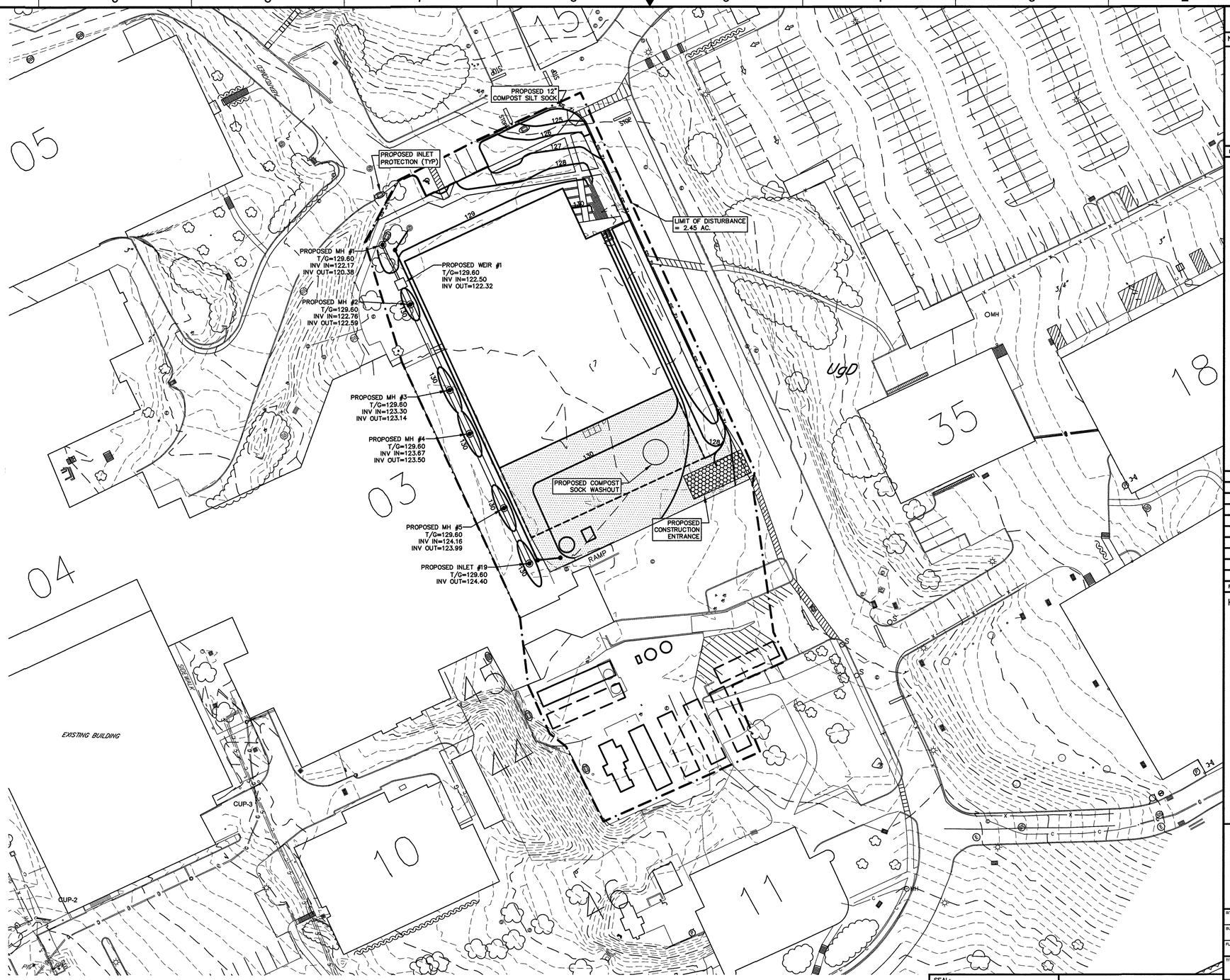

LEGEND:

- EXISTING CONTOURS
- EXISTING WOODS
- EXISTING BRUSH
- EXISTING RIGHT-OF-WAY LINE
- EXISTING FENCE
- PROPOSED FENCE
- EXISTING EDGE OF PAVEMENT
- EXISTING LIGHT
- EXISTING UNDERGROUND COMMUNICATIONS
- EXISTING UNDERGROUND ELECTRIC
- EXISTING UNDERGROUND GAS LINE
- EXISTING WATER LINE
- PROPOSED CONTOUR
- EXISTING CURB
- PROPOSED CURB
- PROPOSED FLUSH CURB
- EXISTING PAINT STRIPING
- PROPOSED PAINT STRIPING
- EXISTING SANITARY SEWER
- EXISTING STORM SEWER, MANHOLE AND INLET
- PROPOSED STORM SEWER, MANHOLE AND INLET
- EXISTING SIDEWALK
- PROPOSED SIDEWALK
- COMPOST SILT SOCK WITH SIZE
- WATERSHED/STORMWATER MANAGEMENT LINE
- LIMIT OF DISTURBANCE
- NPDES BOUNDARY LINE
- SOILS BOUNDARY LINE
- EXISTING PAVEMENT TO BE REPLACED
- PROPOSED PAVEMENT
- EXISTING PAVEMENT CONVERTED TO LANDSCAPING

GRAPHIC SCALE

40 0 20 40 80 160

(IN FEET)
1 inch = 40'

NOTES	REFERENCE DRAWINGS	LEGEND

PAGE No.	DRAWING No.	TITLE

REVISION	DATE REVISED	CONTROL NUMBER

KEY PLAN

gsk do more feel better live longer

UPPER MERION R&D FACILITIES
CAPITAL PROJECTS, ENGINEERING AND DESIGN
709 SWEDELAND ROAD
KING-OF-PRUSSIA, PA 19406
(610) 270-5261

SITE: UPPER MERION
BUILDING: CENTRAL UTILITIES PLANT
FLOOR:

Note: Previous Drawing Reference can be used for old drawing numbers or any previous reference that needs to be retained.

TITLE: PROPOSED CENTRAL UTILITIES PLANT (CUP) BUILDING

SHEET TITLE: ENLARGED EROSION AND SEDIMENT CONTROL PLAN

SEAL:

COMMONWEALTH OF PENNSYLVANIA REGISTERED PROFESSIONAL ENGINEER PETER C. ANDERSEN

ANDERSEN ENGINEERING ASSOCIATES INCORPORATED
306 NORTH FIFTH STREET, PERKASIE, PA
(215) 257-5711

DRN BY:	DRN BY DATE:	FILE REFERENCE:
T.L.C.	10/27/16	5365SITE
CHKD BY:	CHKD BY DATE:	DRAWING STATUS:
P.C.A.		

PROJECT REF.:
SCALE @ E1: 1" = 40'
ORIGINAL CONTRACTOR DRAWING NO.(SEE NOTE ABOVE)
LEGACY GSK DRAWING DWG NO.(SEE NOTE ABOVE)
SHEET NO: 9 OF 21

FIELD BK/PG	AEA JOB NO.:	AEA FILE NO.:	GSK DRAWING NO.:	REV.:
-/-	5365	5365SITE	00-00-009	

C:\Projects\5365\5365SITE.dwg, E&S ENLARGED, 12/6/2016 10:24:23 AM, Spare

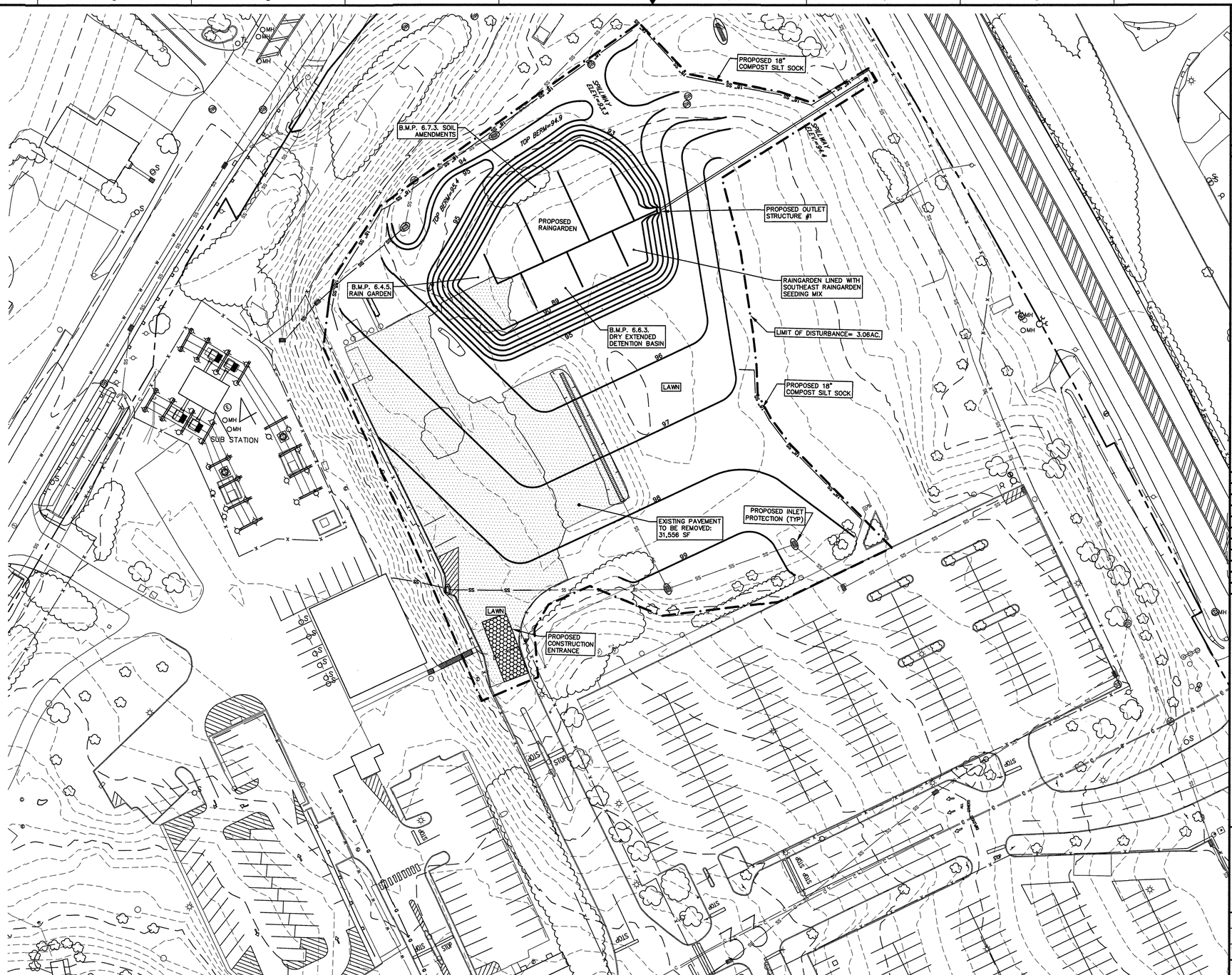

LEGEND:

- EXISTING CONTOURS
- EXISTING WOODS
- EXISTING BRUSH
- EXISTING RIGHT-OF-WAY LINE
- EXISTING FENCE
- PROPOSED FENCE
- EXISTING EDGE OF PAVEMENT
- EXISTING LIGHT
- EXISTING UNDERGROUND COMMUNICATIONS
- EXISTING UNDERGROUND ELECTRIC
- EXISTING UNDERGROUND GAS LINE
- EXISTING WATER LINE
- PROPOSED CONTOUR
- EXISTING CURB
- PROPOSED CURB
- PROPOSED FLUSH CURB
- EXISTING PAINT STRIPING
- PROPOSED PAINT STRIPING
- EXISTING SANITARY SEWER
- EXISTING STORM SEWER, MANHOLE AND INLET
- PROPOSED STORM SEWER, MANHOLE AND INLET
- EXISTING SIDEWALK
- PROPOSED SIDEWALK
- COMPOST SILT SOCK WITH SIZE
- WATERSHED/STORMWATER MANAGEMENT LINE
- LIMIT OF DISTURBANCE
- NPDES BOUNDARY LINE
- SOILS BOUNDARY LINE
- EXISTING PAVEMENT TO BE REPLACED
- PROPOSED PAVEMENT
- EXISTING PAVEMENT CONVERTED TO LANDSCAPING

GRAPHIC SCALE

40 0 20 40 80 160

(IN FEET)
1 inch = 40'

© 2004 THE GLAXOSMITHKLINE GROUP OF COMPANIES. ALL RIGHTS RESERVED. THIS DRAWING IS CONFIDENTIAL AND MAY NOT BE DISCLOSED, COPIED, ADAPTED OR REPRODUCED IN ANY FORM WHATSOEVER WITHOUT THE PRIOR WRITTEN CONSENT OF GLAXOSMITHKLINE.

NOTES | REFERENCE DRAWINGS | LEGEND

PAGE No.	DRAWING No.	TITLE

REVISION	DATE REVISED	CONTROL NUMBER

KEY PLAN

do more
feel better
live longer

UPPER MERION R&D FACILITIES
CAPITAL PROJECTS, ENGINEERING AND DESIGN
709 SWEDELAND ROAD
KING-OF-PRUSSIA, PA 19406
(610) 270-5261

SITE: UPPER MERION
BUILDING: CENTRAL UTILITIES PLANT
FLOOR:

Note: Previous Drawing Reference can be used for old drawing numbers or any previous reference that needs to be retained.

TITLE: PROPOSED CENTRAL UTILITIES PLANT (CUP) BUILDING

SHEET TITLE: RAINGARDEN EROSION AND SEDIMENT CONTROL PLAN

DRN BY: T.L.C.	DRN BY DATE: 10/27/16	FILE REFERENCE: 5365SITE
CHKD BY: P.C.A.	CHKD BY DATE:	DRAWING STATUS:
PROJECT REF.:		SCALE @ E1 1" = 80'
ORIGINAL CONTRACTOR DRAWING NO.(SEE NOTE ABOVE)		
LEGACY GSK DRAWING DWG NO.(SEE NOTE ABOVE)		SHEET NO: 10 OF 21

SEAL: COMMONWEALTH OF PENNSYLVANIA REGISTERED PROFESSIONAL ENGINEER PETER C. ANDERSEN REGISTER NO. PE-025269-E

ANDERSEN ENGINEERING ASSOCIATES INCORPORATED
306 NORTH FIFTH STREET, PERKASIE, PA
(215) 257-5711

FIELD BK/PG	AEA JOB NO.:	AEA FILE NO.:	GSK DRAWING NO.:	REV.:
-/-	5365	5365SITE	00-00-010	

C:\Projects\5365\5365SITE.dwg, R6 RAINGARDEN, 12/14/2016 4:23:10 PM, Spare

STANDARD E&S CONTROL PLAN NOTES

1. ALL EARTH DISTURBANCES, INCLUDING CLEARING AND GRUBBING AS WELL AS CUTS AND FILLS SHALL BE DONE IN ACCORDANCE WITH THE APPROVED E&S PLAN. A COPY OF THE APPROVED DRAWINGS (STAMPED, SIGNED AND DATED BY THE REVIEWING AGENCY) MUST BE AVAILABLE AT THE PROJECT SITE AT ALL TIMES. THE REVIEWING AGENCY SHALL BE NOTIFIED OF ANY CHANGES TO THE APPROVED PLAN PRIOR TO IMPLEMENTATION OF THOSE CHANGES. THE REVIEWING AGENCY MAY REQUIRE A WRITTEN SUBMITTAL OF THOSE CHANGES FOR REVIEW AND APPROVAL AT ITS DISCRETION.

2. AT LEAST 7 DAYS PRIOR TO STARTING ANY EARTH DISTURBANCE ACTIVITIES, INCLUDING CLEARING AND GRUBBING, THE OWNER AND/OR OPERATOR SHALL INVITE ALL CONTRACTORS, THE LANDOWNER, APPROPRIATE MUNICIPAL OFFICIALS, THE E&S PLAN PREPARER, THE PCSM PLAN PREPARER, THE LICENSED PROFESSIONAL RESPONSIBLE FOR OVERSIGHT OF CRITICAL STAGES OF IMPLEMENTATION OF THE PCSM PLAN, AND A REPRESENTATIVE FROM THE LOCAL CONSERVATION DISTRICT TO AN ON-SITE PRECONSTRUCTION MEETING.

3. AT LEAST 3 DAYS PRIOR TO STARTING ANY EARTH DISTURBANCE ACTIVITIES, OR EXPANDING INTO AN AREA PREVIOUSLY UNMARKED, THE PENNSYLVANIA ONE CALL SYSTEM INC. SHALL BE NOTIFIED AT 1-800-242-1776 FOR THE LOCATION OF EXISTING UNDERGROUND UTILITIES.

4. ALL EARTH DISTURBANCE ACTIVITIES SHALL PROCEED IN ACCORDANCE WITH THE SEQUENCE PROVIDED ON THE PLAN DRAWINGS. DEVIATION FROM THAT SEQUENCE MUST BE APPROVED IN WRITING FROM THE LOCAL CONSERVATION DISTRICT OR BY THE DEPARTMENT PRIOR TO IMPLEMENTATION.

5. AREAS TO BE FILLED ARE TO BE CLEARED, GRUBBED, AND STRIPPED OF TOPSOIL TO REMOVE TREES, VEGETATION, ROOTS AND OTHER OBJECTIONABLE MATERIAL.

6. CLEARING, GRUBBING, AND TOPSOIL STRIPPING SHALL BE LIMITED TO THOSE AREAS DESCRIBED IN EACH STAGE OF THE CONSTRUCTION SEQUENCE. GENERAL SITE CLEARING, GRUBBING AND TOPSOIL STRIPPING MAY NOT COMMENCE IN ANY STAGE OR PHASE OF THE PROJECT UNTIL THE E&S BMP'S SPECIFIED BY THE BMP SEQUENCE FOR THAT STAGE OR PHASE HAVE BEEN INSTALLED AND ARE FUNCTIONING AS DESCRIBED IN THIS E&S PLAN.

7. AT NO TIME SHALL CONSTRUCTION VEHICLES BE ALLOWED TO ENTER AREAS OUTSIDE THE LIMIT OF DISTURBANCE BOUNDARIES SHOWN ON THE PLAN MAPS. THESE AREAS MUST BE CLEARLY MARKED AND FENCED OFF BEFORE CLEARING AND GRUBBING OPERATIONS BEGIN.

8. TOPSOIL REQUIRED FOR THE ESTABLISHMENT OF VEGETATION SHALL BE STOCKPILED AT THE LOCATION(S) SHOWN ON THE PLAN MAP(S) IN THE AMOUNT NECESSARY TO COMPLETE THE FINISH GRADING OF ALL EXPOSED AREAS THAT ARE TO BE STABILIZED BY VEGETATION. EACH STOCKPILE SHALL BE PROTECTED IN THE MANNER SHOWN ON THE PLAN DRAWINGS. STOCKPILE HEIGHTS SHALL NOT EXCEED 35 FEET. STOCKPILE SLOPES SHALL BE 2H:1V OR FLATTER.

9. IMMEDIATELY UPON DISCOVERING UNFORESEEN CIRCUMSTANCES POSING THE POTENTIAL FOR ACCELERATED EROSION AND/OR SEDIMENT POLLUTION, THE OPERATOR SHALL IMPLEMENT APPROPRIATE BEST MANAGEMENT PRACTICES TO MINIMIZE THE POTENTIAL FOR EROSION AND SEDIMENT POLLUTION AND NOTIFY THE LOCAL CONSERVATION DISTRICT AND/OR THE REGIONAL OFFICE OF THE DEPARTMENT.

10. ALL BUILDING MATERIALS AND WASTES SHALL BE REMOVED FROM THE SITE AND RECYCLED OR DISPOSED OF IN ACCORDANCE WITH THE DEPARTMENT'S SOLID WASTE MANAGEMENT REGULATIONS AT 25 PA CODE 260.1 ET. SEQ., 271.1, AND 287.1 ET. SEQ. NO BUILDING MATERIALS OR WASTES OR UNUSED BUILDING MATERIALS SHALL BE BURNED, BURIED, DUMPED, OR DISCHARGED AT THE SITE.

11. ALL OFF-SITE WASTE AND BORROW AREAS MUST HAVE AN E&S PLAN APPROVED BY THE LOCAL CONSERVATION DISTRICT OR THE DEPARTMENT FULLY IMPLEMENTED PRIOR TO BEING ACTIVATED.

12. THE CONTRACTOR IS RESPONSIBLE OR ENSURING THAT ANY MATERIAL BROUGHT ON SITE IS CLEAN FILL. FORM FP-001 MUST BE RETAINED BY THE PROPERTY OWNER FOR ANY FILL MATERIAL AFFECTED BY A SPILL OR RELEASE OF A REGULATED SUBSTANCE BUT QUALIFYING AS CLEAN FILL DUE TO ANALYTICAL TESTING.

13. ALL PUMPING OF WATER FROM ANY WORK AREA SHALL BE DONE ACCORDING TO THE PROCEDURE DESCRIBED IN THIS PLAN, OVER UNDISTURBED VEGETATED AREAS.

14. VEHICLES AND EQUIPMENT MAY NEITHER ENTER DIRECTLY NOR EXIT DIRECTLY FROM SITE EXCEPT AT EXISTING ENTRANCE GATES.

15. UNTIL THE SITE IS STABILIZED, ALL EROSION AND SEDIMENT BMP'S SHALL BE MAINTAINED PROPERLY. MAINTENANCE SHALL INCLUDE INSPECTIONS OF ALL EROSION AND SEDIMENT BMP'S AFTER EACH RUNOFF EVENT AND ON A WEEKLY BASIS. ALL PREVENTATIVE AND REMEDIAL MAINTENANCE WORK, INCLUDING CLEAN OUT, REPAIR, REPLACEMENT, REGRADING, RESEEDING, REMULCHING AND RENETTING MUST BE PERFORMED IMMEDIATELY. IF THE E&S BMP'S FAIL TO PERFORM AS EXPECTED, REPLACEMENT BMP'S, OR MODIFICATIONS OF THOSE INSTALLED WILL BE REQUIRED.

16. A LOG SHOWING DATES THAT E&S BMP'S WERE INSPECTED AS WELL AS ANY DEFICIENCIES FOUND AND THE DATE THEY WERE CORRECTED SHALL BE MAINTAINED ON THE SITE AND BE MADE AVAILABLE TO REGULATORY AGENCY OFFICIALS AT THE TIME OF INSPECTION.

17. SEDIMENT TRACKED ONTO ANY PUBLIC ROADWAY OR SIDEWALK SHALL BE RETURNED TO THE CONSTRUCTION SITE BY THE END OF EACH WORK DAY AND DISPOSED IN THE MANNER DESCRIBED IN THIS PLAN. IN NO CASE SHALL THE SEDIMENT BE WASHED, SHOVELED, OR SWEPT INTO ANY ROADSIDE DITCH, STORM SEWER, OR SURFACE WATER.

18. ALL SEDIMENT REMOVED FROM BMP'S SHALL BE DISPOSED OF IN THE MANNER DESCRIBED ON THE PLAN DRAWINGS.

19. AREAS WHICH ARE TO BE TOPSOILED SHALL BE SCARIFIED TO A MINIMUM DEPTH OF 3 TO 5 INCHES - 6 TO 12 INCHES ON COMPACTED SOILS - PRIOR TO PLACEMENT OF TOPSOIL. AREAS TO BE VEGETATED SHALL HAVE A MINIMUM 4 INCHES OF TOPSOIL IN PLACE PRIOR TO SEEDING AND MULCHING. FILL OUTSLOPES SHALL HAVE A MINIMUM OF 2 INCHES OF TOPSOIL.

20. ALL FILLS SHALL BE COMPACTED AS REQUIRED TO REDUCE EROSION, SLIPPAGE, SETTLEMENT, SUBSIDENCE OR OTHER RELATED PROBLEMS. FILL INTENDED TO SUPPORT BUILDINGS, STRUCTURES AND CONDUITS, ETC. SHALL BE COMPACTED IN ACCORDANCE WITH LOCAL REQUIREMENTS OR CODES.

21. ALL EARTHEN FILLS SHALL BE PLACED IN COMPACTED LAYERS NOT TO EXCEED 9 INCHES IN THICKNESS.

22. FILL MATERIALS SHALL BE FREE OF FROZEN PARTICLES, BRUSH, ROOTS, SOD, OR OTHER FOREIGN OR OBJECTIONABLE MATERIALS THAT WOULD INTERFERE WITH OR PREVENT CONSTRUCTION OF SATISFACTORY FILLS.

23. FROZEN MATERIALS OR SOFT, MUCKY, OR HIGHLY COMPRESSIBLE MATERIALS SHALL NOT BE INCORPORATED INTO FILLS.

24. FILL SHALL NOT BE PLACED ON SATURATED OR FROZEN SURFACES.

25. SEEPS OR SPRINGS ENCOUNTERED DURING CONSTRUCTION SHALL BE HANDLED IN ACCORDANCE WITH THE STANDARD AND SPECIFICATION FOR SUBSURFACE DRAIN OR OTHER APPROVED METHOD.

26. ALL GRADED AREAS SHALL BE PERMANENTLY STABILIZED IMMEDIATELY UPON REACHING FINISHED GRADE. CUT SLOPES IN COMPETENT BEDROCK AND ROCK FILLS NEED NOT BE VEGETATED. SEED AREAS WITHIN 50 FEET OF A SURFACE WATER, OR AS OTHERWISE SHOWN ON THE PLAN DRAWINGS, SHALL BE BLANKETED ACCORDING TO THE STANDARDS OF THIS PLAN.

27. IMMEDIATELY AFTER EARTH DISTURBANCE ACTIVITIES CEASE IN ANY AREA OR SUBAREA OF THE PROJECT, THE OPERATOR SHALL STABILIZE ALL DISTURBED AREAS. DURING NON-GERMINATING MONTHS, MULCH OR PROTECTIVE BLANKETING SHALL BE APPLIED AS DESCRIBED IN THE PLAN. AREAS NOT AT FINISHED GRADE, WHICH WILL BE REACTIVATED WITHIN 1 YEAR, MAY BE STABILIZED IN ACCORDANCE WITH THE TEMPORARY STABILIZATION SPECIFICATIONS. THOSE AREAS WHICH WILL NOT BE REACTIVATED WITHIN 1 YEAR SHALL BE STABILIZED IN ACCORDANCE WITH THE PERMANENT STABILIZATION SPECIFICATIONS.

28. PERMANENT STABILIZATION IS DEFINED AS A MINIMUM UNIFORM, PERENNIAL 70% VEGETATIVE COVER OR OTHER PERMANENT NON-VEGETATIVE COVER WITH A DENSITY SUFFICIENT TO RESIST ACCELERATED EROSION. CUT AND FILL SLOPES SHALL BE CAPABLE OF RESISTING FAILURE DUE TO SLUMPING, SLIDING, OR OTHER MOVEMENTS.

29. E&S BMP'S SHALL REMAIN FUNCTIONAL AS SUCH UNTIL ALL AREAS TRIBUTARY TO THEM ARE PERMANENTLY STABILIZED OR UNTIL THEY ARE REPLACED BY ANOTHER BMP APPROVED BY THE LOCAL CONSERVATION DISTRICT OR THE DEPARTMENT.

30. UPON COMPLETION OF ALL EARTH DISTURBANCE ACTIVITIES AND PERMANENT STABILIZATION OF ALL DISTURBED AREAS, THE OWNER AND/OR OPERATOR SHALL CONTACT THE LOCAL CONSERVATION DISTRICT FOR AN INSPECTION PRIOR TO REMOVAL/CONVERSION OF THE E&S BMP'S.

31. AFTER FINAL SITE STABILIZATION HAS BEEN ACHIEVED, TEMPORARY EROSION AND SEDIMENT BMP'S MUST BE REMOVED OR CONVERTED TO PERMANENT POST CONSTRUCTION STORMWATER MANAGEMENT BMP'S. AREAS DISTURBED DURING REMOVAL OR CONVERSION OF THE BMP'S SHALL BE STABILIZED IMMEDIATELY. IN ORDER TO ENSURE RAPID REVEGETATION OF DISTURBED AREAS, SUCH REMOVAL/CONVERSIONS ARE TO BE DONE ONLY DURING THE GERMINATING SEASON.

32. UPON COMPLETION OF ALL EARTH DISTURBANCE ACTIVITIES AND PERMANENT STABILIZATION OF ALL DISTURBED AREAS, THE OWNER AND/OR OPERATOR SHALL CONTACT THE LOCAL CONSERVATION DISTRICT TO SCHEDULE A FINAL INSPECTION.

33. FAILURE TO CORRECTLY INSTALL E&S BMP'S, FAILURE TO PREVENT SEDIMENT-LADEN RUNOFF FROM LEAVING THE CONSTRUCTION SITE OR FAILURE TO TAKE IMMEDIATE CORRECTIVE ACTION TO RESOLVE FAILURE OF E&S BMP'S MAY RESULT IN ADMINISTRATIVE, CIVIL, AND/OR CRIMINAL PENALTIES BEING INSTITUTED BY THE DEPARTMENT AS DEFINED IN SECTION 602 OF THE PENNSYLVANIA CLEAN STREAMS LAW. THE CLEAN STREAMS LAW PROVIDES FOR UP TO $10,000 PER DAY IN CIVIL PENALTIES, UP TO $10,000 IN SUMMARY CRIMINAL PENALTIES, AND UP TO $25,000 IN MISDEMEANOR CRIMINAL PENALTIES FOR EACH VIOLATION.

PROPOSED AREA OF DISTURBANCE = 5.51 AC.

CRITICAL STAGE TO BE INSPECTED:

1. CONSTRUCT DRY EXTENDED BASIN/RAIN GARDEN WITH OUTLET PIPE AND OUTLET STRUCTURE.
2. INSTALL ALL REMAINING STORM SEWER INCLUDING.
3. COMPLETE DRY EXTENDED BASIN/RAIN GARDEN BASIN GRADING, FERTILIZE SEED AND MULCH.
4. REPLACE TOPSOIL AND SOIL AMENDMENTS WITHIN INFILTRATION BASIN/DETENTION BASIN.

E&S CONTROL BMP MAINTENANCE PROGRAM

UNTIL THE SITE IS STABILIZED, ALL EROSION AND SEDIMENT BMPs MUST BE MAINTAINED PROPERLY. MAINTENANCE MUST INCLUDE INSPECTIONS OF ALL EROSION AND SEDIMENT CONTROL BMPs AFTER EACH RUNOFF EVENT AND ON A WEEKLY BASIS. ALL PREVENTATIVE AND REMEDIAL MAINTENANCE WORK, INCLUDING CLEAN OUT, REPAIR, REPLACEMENT, REGRADING, RESEEDING, REMULCHING, AND RENETTING, MUST BE PERFORMED IMMEDIATELY. IF EROSION AND SEDIMENT CONTROL BMPs FAIL TO PERFORM AS EXPECTED, REPLACEMENT BMPs OR MODIFICATIONS TO THOSE INSTALLED WILL BE REQUIRED.

RESPONSIBILITIES FOR FILL MATERIAL

THE CONTRACTOR SHALL BE RESPONSIBLE TO PERFORM ENVIRONMENTAL DUE DILIGENCE AND DETERMINE THAT ALL FILL IMPORTED TO THE SITE MEETS THE DEP DEFINITION OF CLEAN FILL.

THE RESPONSIBILITIES OF DUE DILIGENCE INVOLVES INVESTIGATIVE TECHNIQUES, INCLUDING, BUT NOT LIMITED TO, VISUAL PROPERTY INSPECTIONS, ELECTRONIC DATA BASE SEARCHES, REVIEW OF OWNERSHIP AND USE HISTORY OF PROPERTY, SANBORN MAPS, ENVIRONMENTAL QUESTIONNAIRES, TRANSACTION SCREENS, ANALYTICAL TESTING, ENVIRONMENTAL ASSESSMENTS OR AUDITS.

CLEAN FILL SHALL BE UNCONTAMINATED, NON-WATER-SOLUBLE, NON-DECOMPOSED INERT SOLID MATERIAL. CLEAN FILL INCLUDES SOIL, ROCK, STONE DREDGED MATERIAL, USED ASPHALT, AND BRICK, BLOCK OR CONCRETE FROM CONSTRUCTION AND DEMOLITION ACTIVATES THAT IS SEPARATE FROM OTHER WASTE AND RECOGNIZED AS SUCH. (25 PA CODE §§ 271.101 AND 287.101) THE TERM DOES NOT INCLUDE MATERIALS PLACED IN OR ON THE WATERS OF THE COMMONWEALTH UNLESS OTHERWISE NOTED.

THE CONTRACTOR SHALL PERFORM A PA DOT CLEAN FILL ENVIRONMENTAL DUE DILIGENCE PHASE 1 INSPECTION. FILL MATERIAL THAT DOES NOT PASS THE PHASE 1 INSPECTION SHALL NOT BE USED ON SITE.

RECEIVING WATERS CLASSIFICATION

THE RECEIVING WATERS FOR ALL DRAINAGE AREAS OF THE PROPOSED PROJECT ARE TO A TRIBUTARY TO THE SCHUYKILL RIVER.

THE PA DEP CHAPTER 93 CLASSIFICATION IS WWF, MF.

NOTIFICATION REGARDING MAINTENANCE OF PUBLIC STREETS DURING CONSTRUCTION ACTIVITY

MUD SEDIMENT AND/OR DEBRIS TRACKED FROM THE SITE ONTO PUBLIC CARTWAY SHALL BE IMMEDIATELY REMOVED BY BROOMING AND/OR MECHANICAL MEANS TO THE SATISFACTION OF THE TOWNSHIP. USE OF A BACKHOE BUCKET TO SCRAP ROADWAY SURFACE IS PROHIBITED. WHERE MUD AND/OR SEDIMENT IS CAUSING SLICK AND/OR HAZARDOUS CONDITIONS, ROADWAY SURFACE SHALL BE IMMEDIATELY PRESSURE WASHED TO REMOVE CONDITION. ALL SEDIMENT LADEN WATER MUST BE FILTERED IN A MANURE SATISFACTORY TO THE BUCKS COUNTY CONSERVATION DISTRICT BEFORE ENTERING STORM SEWERS AND/OR DRAINAGE CHANNELS.

OPTIONAL NOTES

THE FOLLOWING NOTES SHOULD BE ADDED TO PLAN DRAWINGS AS APPLICABLE.

1. CONCRETE WASH WATER SHALL BE HANDLED IN THE MANNER DESCRIBED ON THE PLAN DRAWINGS. IN NO CASE SHALL IT BE ALLOWED TO ENTER ANY SURFACE WATERS OR UNDERGROUND SYSTEMS.
2. ALL CHANNELS SHALL BE KEPT FREE OF OBSTRUCTIONS INCLUDING BUT NOT LIMITED TO FILL, ROCKS, LEAVES, WOODY DEBRIS, ACCUMULATED SEDIMENT, EXCESS VEGETATION, AND CONSTRUCTION MATERIAL/WASTES.
3. UNDERGROUND UTILITIES CUTTING THROUGH ANY ACTIVE CHANNEL SHALL BE IMMEDIATELY BACKFILLED AND THE CHANNEL RESTORED TO ITS ORIGINAL CROSS-SECTION AND PROTECTIVE LINING. ANY BASE FLOW WITHIN THE CHANNEL SHALL BE CONVEYED PAST THE WORK AREA IN THE MANNER DESCRIBED IN THIS PLAN UNTIL SUCH RESTORATION IS COMPLETE.
4. CHANNELS HAVING RIPRAP, RENO MATTRESS, OR GABION LININGS MUST BE SUFFICIENTLY OVER-EXCAVATED TO THAT THE DESIGN DIMENSIONS WILL BE PROVIDED AFTER PLACEMENT OF THE PROTECTIVE LINING.
5. SEDIMENT BASINS AND/OR TRAPS SHALL BE KEPT FREE OF ALL CONSTRUCTION WASTE, WASH WATER, AND OTHER DEBRIS HAVING POTENTIAL TO CLOG THE BASIN/TRAP OUTLET STRUCTURES AND/OR POLLUTE THE SURFACE WATERS.
6. SEDIMENT BASINS SHALL BE PROTECTED FROM UNAUTHORIZED ACTS BY THIRD PARTIES.
7. ANY DAMAGE THAT OCCURS IN WHOLE OR IN PART AS A RESULT OF BASIN OR TRAP DISCHARGE SHALL BE IMMEDIATELY REPAIRED BY THE PERMITTEE IN A PERMANENT MANNER SATISFACTORY TO THE MUNICIPALITY, LOCAL CONSERVATION DISTRICT, AND THE OWNER OF THE DAMAGED PROPERTY.
8. UPON REQUEST, THE APPLICANT OR HIS CONTRACTOR SHALL PROVIDE AS AS-BUILT (RECORD DRAWING) FOR ANY SEDIMENT BASIN OR TRAP TO THE MUNICIPAL INSPECTOR, LOCAL CONSERVATION DISTRICT OR THE DEPARTMENT.
9. EROSION CONTROL BLANKETING SHALL BE INSTALLED ON ALL SLOPES 3H:1V OR STEEPER WITHIN 50 FEET OF A SURFACE WATER AND ALL OTHER DISTURBED AREAS SPECIFIED ON THE PLAN MAPS AND/OR DETAIL SHEETS.
10. FILL MATERIAL FOR EMBANKMENTS SHALL BE FREE OF ROOTS, OR OTHER WOODY VEGETATION, ORGANIC MATERIAL, LARGE STONES, AND OTHER OBJECTIONABLE MATERIALS. THE EMBANKMENT SHALL BE COMPACTED IN MAXIMUM ________ LAYERED LIFTS AT ________ % DENSITY.

RESPONSES TO SOIL LIMITATIONS:

*USE SUFFICIENT AND PROPER BEST MANAGEMENT PRACTICES TO MINIMIZE EROSION.

*DO NOT PERFORM TRENCHING, BACKFILLING OR COMPACTING WHEN WEATHER CONDITIONS OR THE CONDITION OF MATERIAL IS SUCH, IN THE OPINION OF THE ENGINEER, THAT WORK CANNOT BE PERFORMED SATISFACTORY.

*DO NOT USE BACKFILL MATERIALS CONTAINING MOISTURE IN EXCESS OF THE AMOUNT NECESSARY FOR COMPACTION.

*PLAN WORK SO AS TO PROVIDE ADEQUATE PROTECTION DURING STORMS WITH PROVISIONS AVAILABLE FOR PREVENTING FLOOD DAMAGE.

*KEEP EXCAVATIONS FREE FROM WATER DURING THE PERFORMANCE OF WORK. PROVIDE AND OPERATE PUMPS WITH SUFFICIENT CAPACITY FOR DEWATERING THE EXCAVATIONS. PONDED WATER TO BE PUMPED THROUGH A FILTER BAG.

*USE SEED SUITED FOR SITE CONDITIONS; PROVIDE SUFFICIENT TOPSOIL PREPARATION AND MULCHING.

*WORK DURING WARM WEATHER MONTHS TO ACHIEVE THESE ENDS.

E&S CONSTRUCTION SEQUENCE

NOTE: ALL EARTH DISTURBANCE ACTIVITIES SHALL PROCEED IN ACCORDANCE WITH THE FOLLOWING SEQUENCE. EACH STAGE SHALL BE COMPLETED BEFORE ANY FOLLOWING STAGE IS INITIATED. CLEARING AND GRUBBING SHALL BE LIMITED ONLY THOSE AREAS DESCRIBED IN EACH STAGE. A PROFESSIONAL OR DESIGNEE WILL BE PRESENT ON SITE DURING INSTALLATION OF STORMWATER BMPS THAT ARE LISTED AS CRITICAL STAGES.

1. DELINEATE THE LIMIT OF DISTURBANCE WITH CONSTRUCTION FENCE. (TOTAL 1 DAY)
2. INSTALL EROSION AND SEDIMENT CONTROL BMPS IN THE FOLLOWING ORDER:
   1. CONSTRUCTION ENTRANCE
   2. COMPOST FILTER SOCK (TOTAL 2 DAYS)
3. CONSTRUCT SEDIMENTATION TRAP. (4 DAYS) - CRITICAL STAGE
4. DEMOLISH EXISTING STRUCTURES AS NECESSARY.
5. CLEAR AND GRUB AREA TO BE GRADED FOR PROPOSED IMPROVEMENTS (2 DAYS).
6. ROUGH GRADE AREA FOR PROPOSED IMPROVEMENTS.
7. TEMPORARILY STABILIZE DISTURBED AREA.
8. INSTALL STORM SEWER, SANITARY SEWER (10 DAYS) - CRITICAL STAGE
9. CONSTRUCT PROPOSED PARKING AND BUILDING. STABILIZE DISTURBED AREAS OF EACH AS THEY ARE COMPLETED (180 DAYS)
10. CONVERT SEDIMENTATION TRAP TO RAIN GARDEN/DETENTION BASIN (5 DAYS)
11. INSTALL OUTLET STRUCTURE, UNDER DRAIN AND OUTLET PIPE. (5 DAYS)
12. FINE GRADE. (2 DAYS)
13. PERMANENTLY STABILIZE DISTURBED AREAS. (2 DAYS)
14. ONCE PERMANENT STABILIZATION HAS BEEN ACHIEVED, REMOVE ALL EROSION AND SEDIMENT CONTROL BMP'S AND RE-STABILIZE AFFECTED AREAS.

SEEDING SPECIFICATIONS:

TEMPORARY SEEDING AND MULCHING SPECIFICATIONS

A) LIME: PULVERIZED AGRICULTURAL LIMESTONE.
APPLICATION RATE: 80 LBS. PER 1000 S.F.
(DETERMINE ACTUAL NEED FOR LIME WITH SOIL TEST)

B) FERTILIZER: 10-20-20 ANALYSIS COMMERCIAL FERTILIZER
APPLICATION RATE: 192 LBS. PER 1000 S.F.

C) SEED: ANNUAL RYE GRASS
APPLICATION RATE: 3 LBS. PER 1000 S.F.

D) MULCH: STRAW OR UNROTTED SALT HAY TO BE APPLIED AFTER SEEDING
APPLICATION RATE: 3 TONS PER ACRE OR 138 LBS. PER 1000 S.F.

PERMANENT SEEDING AND MULCHING SPECIFICATIONS

A) LIME: PULVERIZED AGRICULTURAL LIMESTONE.
APPLICATION RATE: 50 LBS. PER 1000 S.F.
(DETERMINE ACTUAL NEED FOR LIME WITH SOIL TEST)

B) FERTILIZER: 10-6-4 ANALYSIS COMMERCIAL FERTILIZER
APPLICATION RATE: 35 LBS. PER 1000 S.F.

C) SEED: 60% KENTUCKY BLUEGRASS
30% CREEPING RED FESCUE
10% FINE LEAF RYE
APPLICATION RATE: 6 LBS. PER 1000 S.F.

D) MULCH: STRAW OR UNROTTED SALT HAY TO BE APPLIED AFTER SEEDING
APPLICATION RATE: 3 TONS PER ACRE OR 138 LBS. PER 1000 S.F.

LAND USE

EXISTING LAND USE IS INDUSTRIAL - RESEARCH AND DEVELOPMENT. THE LAND USE IN THE PAST 50 YEARS WAS AGRICULTURAL.

CRITICAL STAGES

A CRITICAL STAGE OF IMPLEMENTATION FOR WHICH A LICENSED PROFESSIONAL OR DESIGNEE WILL BE PRESENT ON SITE WILL BE FOR THE CONSTRUCTION OF THE DETENTION AND INFILTRATION BASINS AND THE UNDERGROUND INFILTRATION BASIN.

THERMAL IMPACTS

IT IS ANTICIPATED THAT THE INFILTRATION BMP'S WILL ACT TO ATTENUATE THERMAL IMPACTS.

GEOLOGIC FORMATIONS/SOIL CONDITIONS

THE SITE DOES NOT APPEAR TO HAVE NATURAL OCCURRING GEOLOGIC FORMATIONS OR SOIL CONDITIONS THAT MAY HAVE THE POTENTIAL TO CAUSE POLLUTION.

MEASURES FOR RECYCLING/DISPOSAL OF WASTES

BEFORE DISPOSING OF SOIL OR RECEIVING BORROW FOR THE SITE, THE OPERATOR MUST ASSURE THAT EACH SUCH BORROW OR RECEIVING AREA HAS AN EROSION AND SEDIMENT CONTROL PLAN APPROVED BY THE COUNTY CONSERVATION DISTRICT AND WHICH IS BEING IMPLEMENTED AND MAINTAINED ACCORDING TO CHAPTER 102 REGULATIONS. ALL PAVING DEBRIS AND ROCKS REMOVE DURING FINAL LANDSCAPE RESTORATION SHALL BE COMPLETELY REMOVED FROM SITE AND DISPOSED OF IN THE PROPER MANNER. THERE SHALL BE NO ON-SITE BURIAL OR BURNING OF ANY MATERIAL.

CONSTRUCTION WASTES EXPECTED TO BE CREATED DURING THE PROJECT CONSIST OF WOOD DEBRIS, OLD FILL MATERIAL, VEGETATIVE MATERIAL, EXCESS CONCRETE AND BUILDING MATERIAL.

DETENTION AND INFILTRATION BASINS AND AN UNDERGROUND INFILTRATION BASIN ARE THE BEST MANAGEMENT PRACTICES PROPOSED TO CONTROL STORM WATER RUNOFF AFTER CONSTRUCTION.

NPDES GENERAL SITE NOTES

1. THIS PROJECT WAS DESIGNED TO MINIMIZE EXTENT AND DURATION OF EARTH DISTURBANCE, BY STABILIZING ANY DISTURBED AREAS AS SOON AS POSSIBLE.
2. THIS PROJECT WAS DESIGNED TO PROTECT EXISTING DRAINAGE FEATURES AND EXISTING VEGETATION BY LIMITING LAND CLEARING AND GRADING.
3. THIS PROJECT WAS DESIGNED TO MINIMIZE SOIL COMPACTION, BY LIMITING THE USE OF EQUIPMENT IN AREAS OF DISTURBANCE AND AREAS THAT ARE OUTSIDE OF THE DISTURBED AREA.
4. THIS PROJECT UTILIZES SOIL AMENDMENTS, INFILTRATION, LANDSCAPING, INFILTRATION BASIN AND DETENTION FACILITIES TO MINIMIZE CHANGES IN STORMWATER RUNOFF.
5. THERE ARE NO KNOWN GEOLOGIC OR SOIL CONDITIONS THAT MAY HAVE THE POTENTIAL TO CAUSE POLLUTION.
6. IT IS NOT ANTICIPATED THAT ANY MATERIAL THAT COULD CAUSE POLLUTION WILL BE ENCOUNTERED.
7. THERE AREN'T ANY EXISTING OR PROPOSED RIPARIAN BUFFERS OR PROPOSED INFILTRATION BMP'S LOCATED OUTSIDE OF THE LIMITS OF DISTURBANCE OR OUTSIDE OF THE PROPOSED GRADING AREAS.
8. THERE AREN'T ANY RIPARIAN FOREST BUFFERS INSIDE OR OUTSIDE OF THE LIMIT OF DISTURBANCE.
9. THERE AREN'T ANY RIPARIAN BUFFERS OFFSET.
10. NO RIPARIAN BUFFER IS PROPOSED AS PART OF THIS PROJECT.
11. NO NON-DISCHARGE AND/OR ABACT BMP'S PROPOSED.
12. THIS PLAN PRESERVES THE INTEGRITY OF STREAM CHANNELS AND MAINTAINS AND PROTECTS THE PHYSICAL, BIOLOGICAL AND CHEMICAL QUALITIES OF THE RECEIVING STREAM, BY MAINTAINING THE WATER QUALITY FROM THE AREAS OF CONSTRUCTION.
13. THIS PROJECT WAS DESIGNED TO MINIMIZE GENERATION OF INCREASED STORMWATER RUNOFF, BY LIMITING THE AMOUNT OF IMPERVIOUS SURFACE.
14. THIS PROJECT WAS DESIGNED TO MINIMIZE NEW IMPERVIOUS AREAS, BY LIMITING THE NUMBER OF PARKING SPACES TO BE MINIMUM REQUIRED BY THE BOROUGH ZONING ORDINANCE. FURTHERMORE, SOME OF THE PARKING WILL NOT BE INSTALLED UNTIL IT IS REQUIRED.
15. THIS PROJECT WAS DESIGNED TO PROTECT EXISTING DRAINAGE FEATURES BY RESTRICTING THE AMOUNT OF DISTURBANCE.
16. THIS PROJECT IS NOT IN A HQ OR EV WATERSHED.
17. NO WETLANDS WILL BE DISTURBED. THERE ARE NO WETLANDS ON THIS SITE.
18. NO PROPRIETARY BMP SYSTEMS ARE PROPOSED.
19. ALL SEDIMENT REMOVED FROM BMPS SHALL BE DISPOSED OF IN THE MANNER DESCRIBED ON THE PLANS. SEDIMENT REMOVED FROM BMPS SHALL BE DISPOSED OF IN LANDSCAPED AREAS OUTSIDE OF STEEP SLOPES, WETLANDS, FLOODPLAINS, OR DRAINAGE SWALES AND IMMEDIATELY STABILIZED, OR PLACED IN TOPSOIL STOCKPILES

SOIL SYMBOL	SOIL NAME	SLOPE (%)	DEPTH TO BEDROCK	DEPTH TO SEASONAL HIGH WATER TABLE	DRAINAGE CLASS RATING	LAND CAPABILITY	HYDROLOGIC SOIL GROUP	HYDRIC SOIL
UgD	URBAN LAND	8 TO 25	-	-	-	8s	C	NONHYDRIC

SOURCE: UNITED STATES DEPARTMENT OF AGRICULTURE, NATURAL RESOURCES CONSERVATION SERVICE "WEB SOIL SURVEY"

SEEDING NOTES:

1. ANY DISTURBED AREA ON WHICH ACTIVITY HAS CEASED AND WHICH WILL REMAIN EXPOSED MUST BE SEEDED AND MULCHED IMMEDIATELY. DURING NON-GERMINATING PERIODS, MULCH MUST BE APPLIED AT THE RECOMMENDED RATES. DISTURBED AREAS WHICH ARE NOT AT FINISHED GRADE AND WHICH WILL BE REDISTURBED WITHIN 1 YEAR MAY BE SEEDED AND MULCHED WITH A QUICK GROWING TEMPORARY SEEDING MIXTURE AND MULCH. DISTURBED AREAS WHICH ARE EITHER AT FINISHED GRADE OF WILL NOT BE REDISTURBED WITHIN 1 YEAR MUST BE SEEDED AND MULCHED WITH A PERMANENT SEED MIXTURE AND MULCH.
2. SWALES, DETENTION BASINS, SEDIMENT TRAPS, STOCKPILES AND OTHER STRUCTURAL EROSION CONTROL DEVICES MUST BE SEEDED AND MULCHED IMMEDIATELY.

SOUTHEAST RAIN GARDEN MIX
ERNMX # ERNMX-180-2
SEEDING RATE 20 LB PER ACRE
MIX TYPE Storm Water Management Facility Sites

21% Beaked Panicgrass, SC Ecotype (Panicum anceps, SC Ecotype)
18% Little Bluestem, 'Camper' (Schizachyrium scoparium, 'Camper')
16% Virginia Wildrye, GA Ecotype (Elymus virginicus, GA Ecotype)
15% River Oats, Coastal Plain NC Ecotype (Chasmanthium latifolium (Uniola latifolia), Coastal Plain NC Ecotype)
4% Purple Coneflower (Echinacea purpurea)
4% Partridge Pea, FL Ecotype (Chamaecrista fasciculata (Cassia f.), FL Ecotype)
3% Blackeyed Susan, Coastal Plain NC Ecotype (Rudbeckia hirta, Coastal Plain NC Ecotype)
2% Greenwhite Sedge, Coastal Plain NC Ecotype (Carex albolutescens (C. longii), Coastal Plain NC Ecotype)
2% Mistflower, FL Ecotype (Eupatorium coelestinum (Conoclinium c.), FL Ecotype)
2% Slender Woodoats, NC Ecotype (Chasmanthium laxum (Uniola laxa), NC Ecotype)
1.5% Lanceleaf Coreopsis, Coastal Plain NC Ecotype (Coreopsis lanceolata, Coastal Plain NC Ecotype)
1.5% Largeflower Tickseed, Piedmont GA Ecotype (Coreopsis grandiflora, Piedmont GA Ecotype)
1% Tall Ironweed, SC Ecotype (Vernonia angustifolia, SC Ecotype)
1% Showy Aster, NC Ecotype (Aster spectabilis, NC Ecotype)
1% Spotted Beebalm, Coastal Plain SC Ecotype (Monarda punctata, Coastal Plain SC Ecotype)
1% Scaly Blazing Star, VA Ecotype (Liatris squarrosa, VA Ecotype)
1% White Wild Indigo, SC Ecotype (Baptisia albescens, SC Ecotype)
1% Leathery Rush, Coastal Plain NC Ecotype (Juncus coriaceus, Coastal Plain NC Ecotype)
1% Slender Bushclover, VA Ecotype (Lespedeza virginica, VA Ecotype)
1% Rattlesnakemaster, FL Ecotype (Eryngium yuccifolium, FL Ecotype)
1% Eustis Lake Beardtongue, 'Suther'-NC Ecotype (Penstemon australis, 'Suther'-NC Ecotype)
0.5% Gray Goldenrod, VA Ecotype (Solidago nemoralis, VA Ecotype)
0.5% Anise Goldenrod, GA Ecotype (Solidago odora, GA Ecotype)

Total: 100%

E&S BMP's INSPECTION, REPORTING, AND MONITORING:

A. EXCEPT FOR DATA DETERMINED TO BE CONFIDENTIAL UNDER SECTION 607 OF THE CLEAN STREAMS LAW (35 P.S. §691.607), ALL REPORTS PREPARED IN ACCORDANCE WITH THE TERMS OF THIS PERMIT SHALL BE AVAILABLE FOR PUBLIC INSPECTION AT THE OFFICES OF THE DEPARTMENT OR AUTHORIZED CONSERVATION DISTRICT. AS REQUIRED BY THE CLEAN WATER ACT, THE CLEAN STREAMS LAWS, AND 25 PA. CODE, AND THE DEPARTMENT'S REGULATIONS, PERMIT APPLICATIONS, PERMITS, AND OTHER DOCUMENTS RELATED TO THIS PERMIT SHALL NOT BE CONSIDERED CONFIDENTIAL.

B. THE PERMITTEE AND CO-PERMITTEE(S) SHALL RETAIN RECORDS OF ALL MONITORING INFORMATION INCLUDING COPIES OF ALL MONITORING AND INSPECTION REPORTS REQUIRED BY THIS PERMIT, AND RECORDS OF DATA USED TO COMPLETE THE NOTICE OF INTENT FOR THIS PERMIT, FOR A PERIOD OF THREE YEARS FROM THE DATE OF THE TERMINATION OF COVERAGE UNDER THE PERMIT.

C. THE PERMITTEE AND CO-PERMITTEE(S) MUST ENSURE THAT VISUAL SITE INSPECTIONS ARE CONDUCTED WEEKLY, AND WITHIN 24 HOURS AFTER EACH STORM WATER EVENT THROUGHOUT THE DURATION OF CONSTRUCTION AND UNTIL THE RECEIPT AND ACKNOWLEDGEMENT OF THE NOT BY THE DEPARTMENT OR AUTHORIZED CONSERVATION DISTRICT. THE VISUAL SITE INSPECTIONS AND REPORTS SHALL BE COMPLETED IN A FORMAT PROVIDED BY THE DEPARTMENT, AND CONDUCTED BY QUALIFIED PERSONNEL, TRAINED AND EXPERIENCED IN EROSION AND SEDIMENT CONTROL, TO ASCERTAIN THAT E&S BMPS AND PCSM BMPS ARE PROPERLY CONSTRUCTED AND MAINTAINED TO EFFECTIVELY PREVENT POLLUTION TO THE WATERS OF THIS COMMONWEALTH. A WRITTEN REPORT OF EACH INSPECTION SHALL BE KEPT AND INCLUDE AT A MINIMUM:
(1) A SUMMARY OF SITE CONDITIONS, E&S BMP AND PCSM BMP, IMPLEMENTATION AND MAINTENANCE AND COMPLIANCE ACTIONS; AND
(2) THE DATE, TIME, NAME AND SIGNATURE OF THE PERSON CONDUCTING THE INSPECTION.

D. WHERE E&S OR PCSM BMPS ARE FOUND TO BE INOPERATIVE OR INEFFECTIVE DURING AN INSPECTION, OR ANY OTHER TIME, THE PERMITTEE AND CO-PERMITTEE(S) SHALL IMMEDIATELY CONTACT THE DEPARTMENT OR AUTHORIZED CONSERVATION DISTRICT, BY PHONE OR PERSONAL CONTACT, FOLLOWED BY THE SUBMISSION OF A WRITTEN REPORT WITHIN 5 DAYS OF THE INITIAL CONTACT. NONCOMPLIANCE REPORTS SHALL INCLUDE THE FOLLOWING INFORMATION:
(1) ANY CONDITION ON THE PROJECT SITE WHICH MAY ENDANGER PUBLIC HEALTH, SAFETY, OR THE ENVIRONMENT, OR INVOLVE INCIDENTS WHICH CAUSE OR THREATEN POLLUTION;
(2) THE PERIOD OF NONCOMPLIANCE, INCLUDING EXACT DATES AND TIMES AND/OR ANTICIPATED TIME WHEN THE ACTIVITY WILL RETURN TO COMPLIANCE;
(3) STEPS BEING TAKEN TO REDUCE, ELIMINATE, AND PREVENT RECURRENCE OF THE NONCOMPLIANCE; AND
(4) THE DATE OR SCHEDULE OF DATES, AND IDENTIFYING REMEDIES FOR CORRECTING NONCOMPLIANCE CONDITIONS.

MEASURES FOR RECYCLING OR DISPOSAL OF MATERIALS

BEFORE DISPOSING OF SOIL OR RECEIVING BORROW FOR THE SITE, THE OPERATOR MUST ASSURE THAT EACH SUCH BORROW OR RECEIVING AREA HAS AN EROSION AND SEDIMENT CONTROL PLAN APPROVED BY THE COUNTY CONSERVATION DISTRICT AND WHICH IS BEING IMPLEMENTED AND MAINTAINED ACCORDING TO CHAPTER 102 REGULATIONS. ALL PAVING DEBRIS AND ROCKS REMOVE DURING FINAL LANDSCAPE RESTORATION SHALL BE COMPLETELY REMOVED FROM SITE AND DISPOSED OF IN THE PROPER MANNER. THERE SHALL BE NO ON-SITE BURIAL OR BURNING OF ANY MATERIAL.

SOIL TYPES AND LIMITATIONS

SOILS TAKEN FROM THE SOIL SURVEY OF MONTGOMERY COUNTY, PENNSYLVANIA

MAP SYMBOL & SOIL NAME	STREETS/ROAD	LAWNS & LANDSCAPING	PONDS	
			RESERVOIR AREAS	EMBANKMENTS
UgD URBAN LAND				

RESOLUTION TO SOIL LIMITATIONS

FOR SOILS TO BE DISTURBED

MAP SYMBOL & SOIL NAME	STREETS/ROAD	LAWNS & LANDSCAPING	PONDS	
			RESERVOIR AREAS	EMBANKMENTS
UgD URBAN LAND	PUMP PONDED WATER TO SEDIMENT BASIN OR THROUGH A DIRT BAG	NO LIMITATIONS	NO LIMITATIONS	USE FOR CORE OF EMBANKMENT

SEAL:

COMMONWEALTH OF PENNSYLVANIA
REGISTERED PROFESSIONAL
PETER C. ANDERSEN
ENGINEER
PE-025269-E

ANDERSEN ENGINEERING ASSOCIATES INCORPORATED
306 NORTH FIFTH STREET, PERKASIE, PA
(215) 257-5711

FIELD BK/PG	AEA JOB NO.:	AEA FILE NO.:
-/-	5365	5365SITE

© 2004 THE GLAXOSMITHKLINE GROUP OF COMPANIES. ALL RIGHTS RESERVED. THIS DRAWING IS CONFIDENTIAL AND MAY NOT BE DISCLOSED, COPIED, ADAPTED OR REPRODUCED IN ANY FORM WHATSOEVER WITHOUT THE PRIOR WRITTEN CONSENT OF GLAXOSMITHKLINE.

NOTES	REFERENCE DRAWINGS	LEGEND

PAGE No.	DRAWING No.	TITLE

REVISION	DATE REVISED	CONTROL NUMBER

KEY PLAN

gsk do more feel better live longer

UPPER MERION R&D FACILITIES
CAPITAL PROJECTS, ENGINEERING AND DESIGN
709 SWEDELAND ROAD
KING-OF-PRUSSIA, PA 19406
(610) 270-5261

SITE: UPPER MERION
BUILDING: CENTRAL UTILITIES PLANT
FLOOR:

Note: Previous Drawing Reference can be used for old drawing numbers or any previous reference that needs to be retained.

TITLE: PROPOSED CENTRAL UTILITIES PLANT (CUP) BUILDING

SHEET TITLE: EROSION AND SEDIMENT CONTROL NOTES

DRN BY:	DRN BY DATE:	FILE REFERENCE:
T.L.C.	10/27/16	5365SITE
CHKD BY:	CHKD BY DATE:	DRAWING STATUS:
P.C.A.		

PROJECT REF.:
SCALE @ E1: NOT TO SCALE
ORIGINAL CONTRACTOR DRAWING NO:(SEE NOTE ABOVE)
LEGACY GSK DRAWING DWG NO:(SEE NOTE ABOVE)
SHEET NO: 11 OF 21
GSK DRAWING NO.: 00-00-011
REV.:

C:\Projects\5365\5365SITE.dwg, E&S NOTES, 12/6/2016 11:39:08 AM, Spare

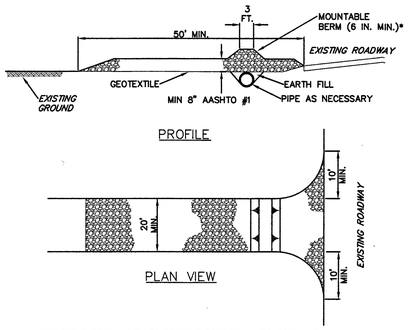

* MOUNTABLE BERM USED TO PROVIDE PROPER COVER FOR PIPE

NOTES:

REMOVE TOPSOIL PRIOR TO INSTALLATION OF ROCK CONSTRUCTION ENTRANCE. EXTEND ROCK OVER FULL WIDTH OF ENTRANCE.

RUNOFF SHALL BE DIVERTED FROM ROADWAY TO A SUITABLE SEDIMENT REMOVAL BMP PRIOR TO ENTERING ROCK CONSTRUCTION ENTRANCE.

MOUNTABLE BERM SHALL BE INSTALLED WHEREVER OPTIONAL CULVERT PIPE IS USED AND PROPER PIPE COVER AS SPECIFIED BY MANUFACTURER IS NOT OTHERWISE PROVIDED. PIPE SHALL BE SIZED APPROPRIATELY FOR SIZE OF DITCH BEING CROSSED.

MAINTENANCE: ROCK CONSTRUCTION ENTRANCE THICKNESS SHALL BE CONSTANTLY MAINTAINED TO THE SPECIFIED DIMENSIONS BY ADDING ROCK. A STOCKPILE SHALL BE MAINTAINED ON SITE FOR THIS PURPOSE. ALL SEDIMENT DEPOSITED ON PAVED ROADWAYS SHALL BE REMOVED AND RETURNED TO THE CONSTRUCTION SITE IMMEDIATELY. IF EXCESSIVE AMOUNTS OF SEDIMENT ARE BEING DEPOSITED ON ROADWAY, EXTEND LENGTH OF ROCK CONSTRUCTION ENTRANCE BY 50 FOOT INCREMENTS UNTIL CONDITION IS ALLEVIATED OR INSTALL WASH RACK. WASHING THE ROADWAY OR SWEEPING THE DEPOSITS INTO ROADWAY DITCHES, SEWERS, CULVERTS, OR OTHER DRAINAGE COURSES IS NOT ACCEPTABLE.

STANDARD CONSTRUCTION DETAIL #3-1
ROCK CONSTRUCTION ENTRANCE

NOT TO SCALE

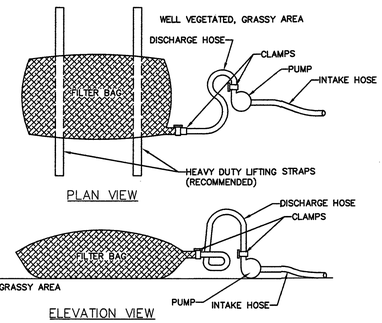

NOTES:

LOW VOLUME FILTER BAGS SHALL BE MADE FROM NON-WOVEN GEOTEXTILE MATERIAL SEWN WITH HIGH STRENGTH, DOUBLE STITCHED "J" TYPE SEAMS. THEY SHALL BE CAPABLE OF TRAPPING PARTICLES LARGER THAN 150 MICRONS. HIGH VOLUME FILTER BAGS SHALL BE MADE FROM WOVEN GEOTEXTILES THAT MEET THE FOLLOWING STANDARDS:

PROPERTY	TEST METHOD	MINIMUM STANDARD
AVG. WDE WIDTH STRENGTH	ASTM D-4884	60 LB/IN
GRAB TENSILE	ASTM D-4632	205 LB
PUNCTURE	ASTM D-4833	110 LB
MULLEN BURST	ASTM D-3786	350 PSI
UV RESISTANCE	ASTM D-4355	70%
AOS % RETAINED	ASTM D-4751	80 SIEVE

A SUITABLE MEANS OF ACCESSING THE BAG WITH MACHINERY REQUIRED FOR DISPOSAL PURPOSES SHALL BE PROVIDED. FILTER BAGS SHALL BE REPLACED WHEN THEY BECOME 1/2 FULL OF SEDIMENT. SPARE BAGS SHALL BE KEPT AVAILABLE FOR REPLACEMENT OF THOSE THAT HAVE FAILED OR ARE FILLED. BAGS SHALL BE PLACED ON STRAPS TO FACILITATE REMOVAL UNLESS BAGS COME WITH LIFTING STRAPS ALREADY ATTACHED.

BAGS SHALL BE LOCATED IN WELL-VEGETATED (GRASSY) AREA, AND DISCHARGE ONTO STABLE, EROSION RESISTANT AREAS. WHERE THIS IS NOT POSSIBLE, A GEOTEXTILE UNDERLAYMENT AND FLOW PATH SHALL BE PROVIDED. BAGS MAY BE PLACED ON FILTER STONE TO INCREASE DISCHARGE CAPACITY. BAGS SHALL NOT BE PLACED ON SLOPES GREATER THAN 5%. FOR SLOPES EXCEEDING 5%, CLEAN ROCK OR OTHER NON-ERODIBLE AND NON-POLLUTING MATERIAL MAY BE PLACED UNDER THE BAG TO REDUCE SLOPE STEEPNESS.

NO DOWNSLOPE SEDIMENT BARRIER IS REQUIRED FOR MOST INSTALLATIONS. COMPOST BERM OR COMPOST FILTER SOCK SHALL BE INSTALLED BELOW BAGS LOCATED IN HQ OR EV WATERSHEDS, WITHIN 50 FEET OF ANY RECEIVING SURFACE WATER OR WHERE GRASSY AREA IS NOT AVAILABLE.

THE PUMP DISCHARGE HOSE SHALL BE INSERTED INTO THE BAGS IN THE MANNER SPECIFIED BY THE MANUFACTURER AND SECURELY CLAMPED. A PIECE OF PVC PIPE IS RECOMMENDED FOR THIS PURPOSE.

THE PUMPING RATE SHALL BE NO GREATER THAN 750 GPM OR 1/2 THE MAXIMUM SPECIFIED BY THE MANUFACTURER, WHICHEVER IS LESS. PUMP INTAKES SHALL BE FLOATING AND SCREENED.

FILTER BAGS SHALL BE INSPECTED DAILY. IF ANY PROBLEM IS DETECTED, PUMPING SHALL CEASE IMMEDIATELY AND NOT RESUME UNTIL THE PROBLEM IS CORRECTED.

STANDARD CONSTRUCTION DETAIL #3-16
PUMPED WATER FILTER BAG

NOT TO SCALE

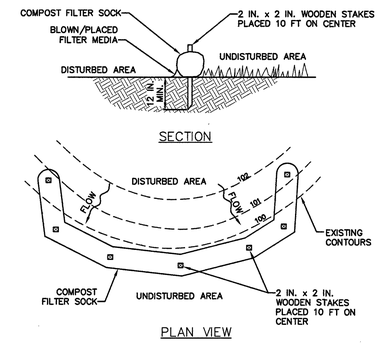

NOTES:

SOCK FABRIC SHALL MEET STANDARDS OF TABLE 4.1 OF THE PA DEP EROSION CONTROL MANUAL. COMPOST SHALL MEET THE STANDARDS OF TABLE 4.2 OF THE PA DEP EROSION CONTROL MANUAL.

COMPOST FILTER SOCK SHALL BE PLACED AT EXISTING LEVEL GRADE. BOTH ENDS OF THE BARRIER SHALL BE EXTENDED AT LEAST 8 FEET UP SLOPE AT 45 DEGREES TO THE MAIN BARRIER ALIGNMENT. MAXIMUM SLOPE LENGTH ABOVE ANY BARRIER SHALL NOT EXCEED THAT SPECIFIED FOR THE SIZE OF THE SOCK AND THE SLOPE OF ITS TRIBUTARY AREA.

TRAFFIC SHALL NOT BE PERMITTED TO CROSS COMPOST FILTER SOCKS.

ACCUMULATED SEDIMENT SHALL BE REMOVED WHEN IT REACHES 1/2 THE ABOVE GROUND HEIGHT OF THE BARRIER AND DISPOSED IN THE MANNER DESCRIBED ELSEWHERE IN THE PLAN.

COMPOST FILTER SOCKS SHALL BE INSPECTED WEEKLY AND AFTER EACH RUNOFF EVENT. DAMAGED SOCKS SHALL BE REPAIRED ACCORDING TO MANUFACTURER'S SPECIFICATIONS OR REPLACED WITHIN 24 HOURS OF INSPECTION.

BIODEGRADABLE COMPOST FILTER SOCKS SHALL BE REPLACED AFTER 6 MONTHS; PHOTODEGRADABLE SOCKS AFTER 1 YEAR. POLYPROPYLENE SOCKS SHALL BE REPLACED ACCORDING TO MANUFACTURER'S RECOMMENDATIONS.

UPON STABILIZATION OF THE AREA TRIBUTARY TO THE SOCK, STAKES SHALL BE REMOVED. THE SOCK MAY BE LEFT IN PLACE AND VEGETATED OR REMOVED. IN THE LATTER CASE, THE MESH SHALL BE CUT OPEN AND THE MULCH SPREAD AS A SOIL SUPPLEMENT.

STANDARD CONSTRUCTION DETAIL #4-1
COMPOST FILTER SOCK

NOT TO SCALE

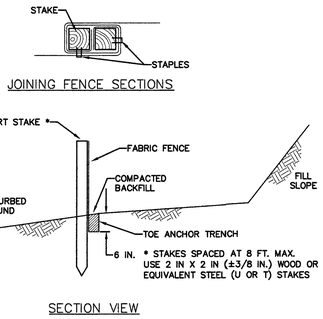

NOTES:

FABRIC SHALL HAVE THE MINIMUM PROPERTIES AS SHOWN IN TABLE 4.3 OF THE PA DEP EROSION CONTROL MANUAL.

FABRIC WIDTH SHALL BE 30 IN. MINIMUM. STAKES SHALL BE HARDWOOD OR EQUIVALENT STEEL (U OR T) STAKES.

SILT FENCE SHALL BE PLACED AT LEVEL EXISTING GRADE. BOTH ENDS OF THE FENCE SHALL BE EXTENDED AT LEAST 8 FEET UP SLOPE AT 45 DEGREES TO THE MAIN FENCE ALIGNMENT.

SEDIMENT SHALL BE REMOVED WHEN ACCUMULATIONS REACH HALF THE ABOVE GROUND HEIGHT OF THE FENCE.

ANY SECTION OF SILT FENCE WHICH HAS BEEN UNDERMINED OR TOPPED SHALL BE IMMEDIATELY REPLACED WITH A ROCK FILTER OUTLET (STANDARD CONSTRUCTION DETAIL # 4-6).

FENCE SHALL BE REMOVED AND PROPERLY DISPOSED OF WHEN TRIBUTARY AREA IS PERMANENTLY STABILIZED.

STANDARD CONSTRUCTION DETAIL #4-7
STANDARD SILT FENCE (18" HIGH)

NOT TO SCALE

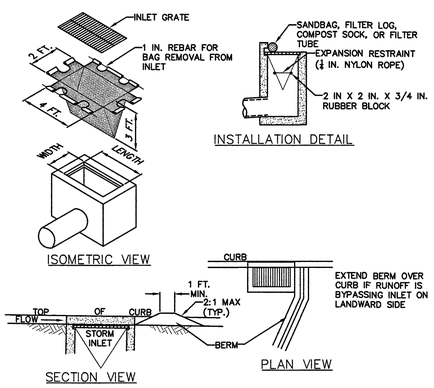

NOTES:

MAXIMUM DRAINAGE AREA = 1/2 ACRE.

INLET PROTECTION SHALL NOT BE REQUIRED FOR INLET TRIBUTARY TO SEDIMENT BASIN OR TRAP. BERMS SHALL BE REQUIRED FOR ALL INSTALLATIONS.

ROLLED EARTHEN BERM SHALL BE MAINTAINED UNTIL ROADWAY IS STONED. ROAD SUBBASE BERM SHALL BE MAINTAINED UNTIL ROADWAY IS PAVED. SIX INCH MINIMUM HEIGHT ASPHALT BERM SHALL BE MAINTAINED UNTIL ROADWAY SURFACE RECEIVES FINAL COAT.
AT A MINIMUM, THE FABRIC SHALL HAVE A MINIMUM GRAB TENSILE STRENGTH OF 120 LBS, A MINIMUM BURST STRENGTH OF 200 PSI, AND A MINIMUM TRAPEZOIDAL TEAR STRENGTH OF 50 LBS. FILTER BAGS SHALL BE CAPABLE OF TRAPPING ALL PARTICLES NOT PASSING A NO. 40 SIEVE.

INLET FILTER BAGS SHALL BE INSPECTED ON A WEEKLY BASIS AND AFTER EACH RUNOFF EVENT. BAGS SHALL BE EMPTIED AND RINSED OR REPLACED WHEN HALF FULL OR WHEN FLOW CAPACITY HAS BEEN REDUCED SO AS TO CAUSE FLOODING OR BYPASSING OF THE INLET. DAMAGED OR CLOGGED BAGS SHALL BE REPLACED. A SUPPLY SHALL BE MAINTAINED ON SITE FOR REPLACEMENT OF BAGS. ALL NEEDED REPAIRS SHALL BE INITIATED IMMEDIATELY AFTER THE INSPECTION. DISPOSE OF ACCUMULATED SEDIMENT AS WELL AS ALL USED BAGS ACCORDING TO THE PLAN NOTES.

DO NOT USE ON MAJOR PAVED ROADWAYS WHERE PONDING MAY CAUSE TRAFFIC HAZARDS.

STANDARD CONSTRUCTION DETAIL #4-15
FILTER BAG INLET PROTECTION - TYPE C INLET

NOT TO SCALE

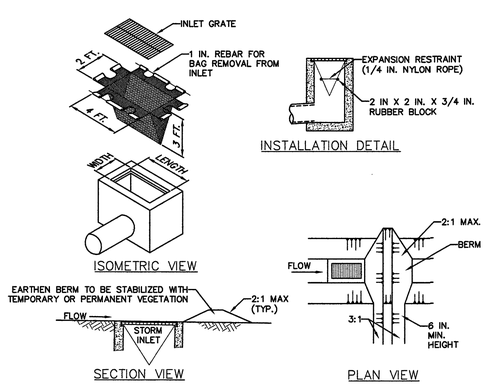

NOTES:

MAXIMUM DRAINAGE AREA = 1/2 ACRE.

INLET PROTECTION SHALL NOT BE REQUIRED FOR INLET TRIBUTARY TO SEDIMENT BASIN OR TRAP. BERMS SHALL BE REQUIRED FOR ALL INSTALLATIONS.

ROLLED EARTHEN BERM IN ROADWAY SHALL BE MAINTAINED UNTIL ROADWAY IS STONED. ROAD SUBBASE BERM ON ROADWAY SHALL BE MAINTAINED UNTIL ROADWAY IS PAVED. EARTHEN BERM IN CHANNEL SHALL BE MAINTAINED UNTIL PERMANENT STABILIZATION IS COMPLETED OR REMAIN PERMANENTLY.

AT A MINIMUM, THE FABRIC SHALL HAVE A MINIMUM GRAB TENSILE STRENGTH OF 120 LBS., A MINIMUM BURST STRENGTH OF 200 PSI, AND A MINIMUM TRAPEZOIDAL TEAR STRENGTH OF 50 LBS. FILTER BAGS SHALL BE CAPABLE OF TRAPPING ALL PARTICLES NOT PASSING A NO. 40 SIEVE.

INLET FILTER BAGS SHALL BE INSPECTED ON A WEEKLY BASIS AND AFTER EACH RUNOFF EVENT. BAGS SHALL BE EMPTIED AND RINSED OR REPLACED WHEN HALF FULL OR WHEN FLOW CAPACITY HAS BEEN REDUCED SO AS TO CAUSE FLOODING OR BYPASSING OF THE INLET. DAMAGED OR CLOGGED BAGS SHALL BE REPLACED. A SUPPLY SHALL BE MAINTAINED ON SITE FOR REPLACEMENT OF BAGS. ALL NEEDED REPAIRS SHALL BE INITIATED IMMEDIATELY AFTER THE INSPECTION. DISPOSE ACCUMULATED SEDIMENT AS WELL AS ALL USED BAGS ACCORDING TO THE PLAN NOTES.

DO NOT USE ON MAJOR PAVED ROADWAYS WHERE PONDING MAY CAUSE TRAFFIC HAZARDS.

STANDARD CONSTRUCTION DETAIL #4-16
FILTER BAG INLET PROTECTION - TYPE M INLET

NOT TO SCALE

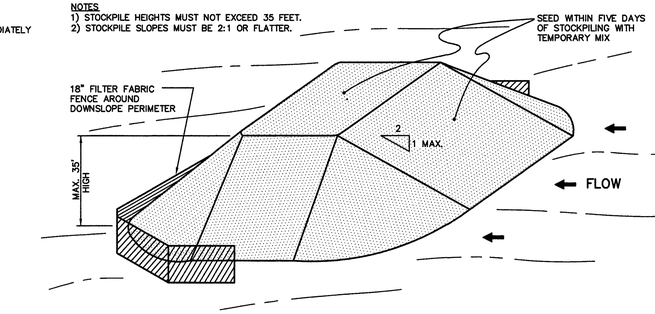

TOPSOIL STORAGE PILE

NOT TO SCALE

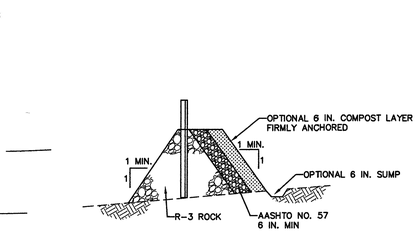

NOTES:

A ROCK FILTER OUTLET SHALL BE INSTALLED WHERE FAILURE OF A SILT FENCE OR STRAW BALE BARRIER HAS OCCURRED DUE TO CONCENTRATED FLOW. ANCHORED COMPOST LAYER SHALL BE USED ON UPSLOPE FACE IN HQ AND EV WATERSHEDS.

SEDIMENT SHALL BE REMOVED WHEN ACCUMULATIONS REACH 1/3 THE HEIGHT OF THE OUTLET.

STANDARD CONSTRUCTION DETAIL #4-6
ROCK FILTER OUTLET

NOT TO SCALE

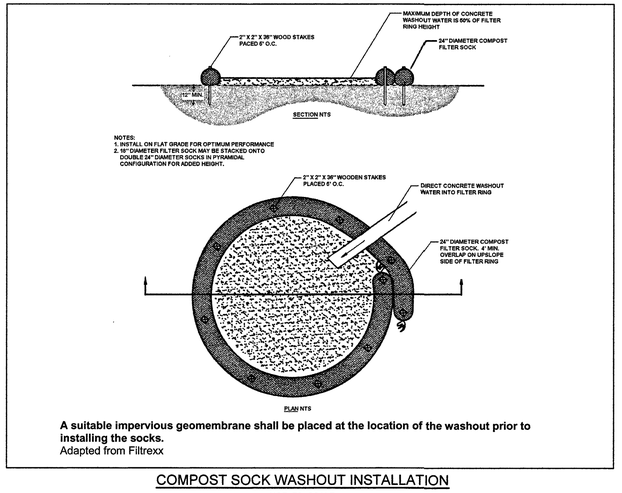

A suitable impervious geomembrane shall be placed at the location of the washout prior to installing the socks.
Adapted from Filtrexx

COMPOST SOCK WASHOUT INSTALLATION

NOT TO SCALE

© 2004 THE GLAXOSMITHKLINE GROUP OF COMPANIES. ALL RIGHTS RESERVED. THIS DRAWING IS CONFIDENTIAL AND MAY NOT BE DISCLOSED, COPIED, ADAPTED OR REPRODUCED IN ANY FORM WHATSOEVER WITHOUT THE PRIOR WRITTEN CONSENT OF GLAXOSMITHKLINE.

NOTES | REFERENCE DRAWINGS | LEGEND

PAGE No.	DRAWING No.	TITLE

REVISION	DATE REVISED	CONTROL NUMBER

KEY PLAN

do more feel better live longer

UPPER MERION R&D FACILITIES
CAPITAL PROJECTS, ENGINEERING AND DESIGN
709 SWEDELAND ROAD
KING-OF-PRUSSIA, PA 19406
(610) 270-5261

SITE: UPPER MERION
BUILDING: CENTRAL UTILITIES PLANT
FLOOR:

Note: Previous Drawing Reference can be used for old drawing numbers or any previous reference that needs to be retained.

TITLE: PROPOSED CENTRAL UTILITIES PLANT (CUP) BUILDING
SHEET TITLE: EROSION AND SEDIMENT CONTROL DETAILS 1

DRN BY:	DRN BY DATE:	FILE REFERENCE:
T.L.C.	10/27/16	5365SITE
CHKD BY:	CHKD BY DATE:	DRAWING STATUS:
P.C.A.		

PROJECT REF.:
SCALE @ E1: NOT TO SCALE
ORIGINAL CONTRACTOR DRAWING NO.(SEE NOTE ABOVE)
LEGACY GSK DRAWING DWG NO.(SEE NOTE ABOVE)
SHEET NO.: 12 OF 21
GSK DRAWING NO.: 00-00-012
REV.:

SEAL: COMMONWEALTH OF PENNSYLVANIA REGISTERED PROFESSIONAL ENGINEER PETER C. ANDERSEN PE-025269-E

ANDERSEN ENGINEERING ASSOCIATES INCORPORATED
306 NORTH FIFTH STREET, PERKASIE, PA
(215) 257-5711

FIELD BK/PG	AEA JOB NO.:	AEA FILE NO.:
-/-	5365	5365SITE

C:\Projects\5365\5365SITE.dwg, E&S DETAILS, 12/6/2016 11:29:31 AM, Spam

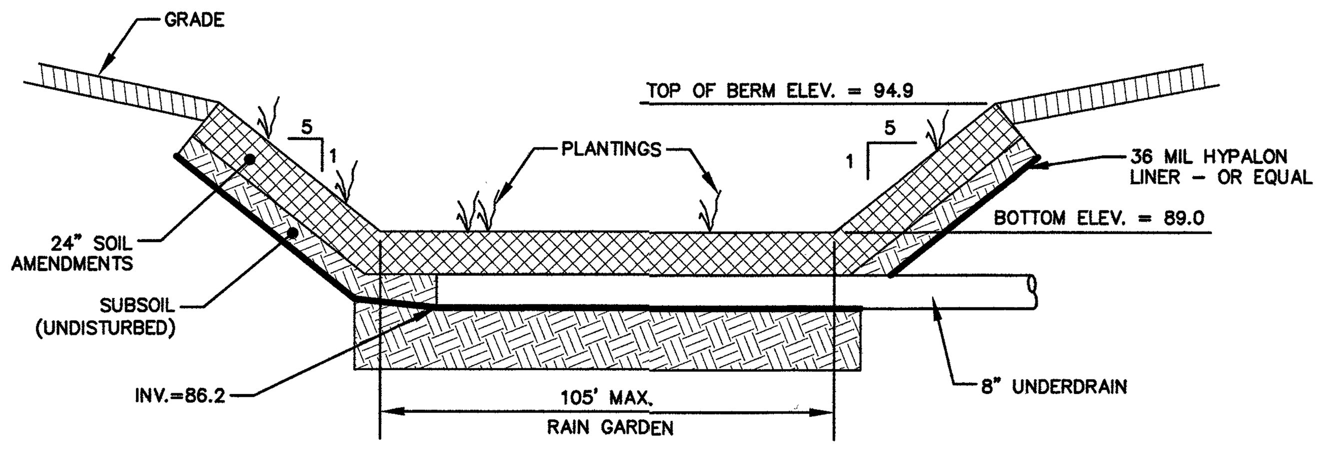

RAIN GARDEN CROSS SECTION DETAIL

NOT TO SCALE

BOTTOM OF BASIN – 89.0
100 YEAR STORAGE ELEVATION – 93.65
PROPOSED EMERGENCY SPILLWAY ELEVATION – 93.30

TOP BERM – 94.90
100 YEAR FLOW OVER SPILLWAY ELEV. – 93.82
FREEBOARD – 1.08'

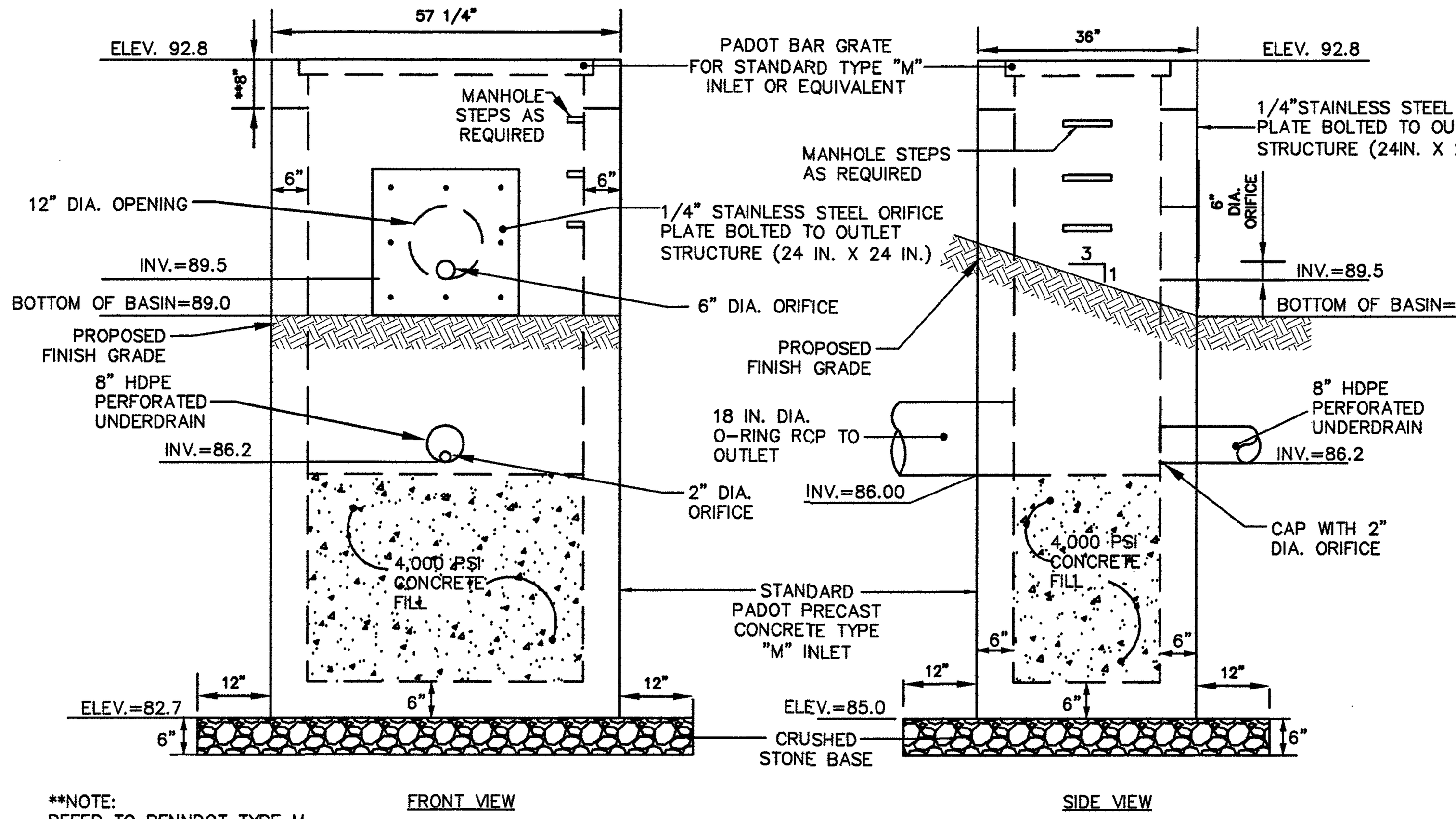

**NOTE:
REFER TO PENNDOT TYPE M INLET TOP DETAILS FOR REHABILITATION PROJECTS, RC-45M SHT. 18 OF 20

RAIN GARDEN OUTLET STRUCTURE DETAIL

NOT TO SCALE

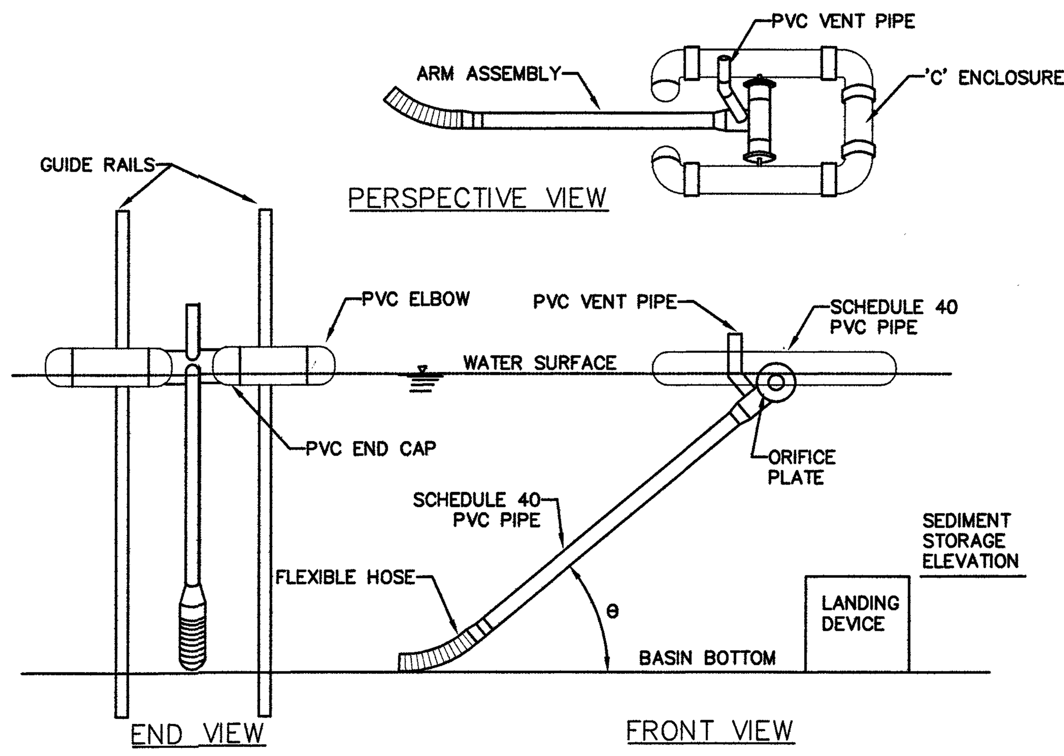

BASIN NO.	WATER SURFACE ELEVATION (FT)	ARM LENGTH (FT)	ARM DIA. (IN)	ORIFICE DIA. (IN)	TOP OF LANDING DEVICE ELEVATION (FT)	FLEXIBLE HOSE LENGTH (IN)	FLEXIBLE HOSE ATTACHMENT ELEVATION (FT)
1	93.55	10	≥4	4	87.20	24	86.20

NOTES:

ORIFICE DIAMETER MUST BE EQUAL TO OR LESS THAN ARM DIAMETER

A ROPE SHALL BE ATTACHED TO THE SKIMMER ARM TO FACILITATE ACCESS TO THE SKIMMER ONCE INSTALLED.

SKIMMER SHALL BE INSPECTED WEEKLY AND AFTER EACH RUNOFF EVENT.
ANY MALFUNCTIONING SKIMMER SHALL BE REPAIRED OR REPLACED WITHIN 24 HOURS OF INSPECTION.

ICE OR SEDIMENT BUILDUP AROUND THE PRINCIPAL SPILLWAY SHALL BE REMOVED SO AS TO ALLOW THE SKIMMER TO RESPOND TO FLUCTUATING WATER ELEVATIONS.

SEDIMENT SHALL BE REMOVED FROM THE BASIN WHEN IT REACHES THE LEVEL MARKED ON THE SEDIMENT CLEAN-OUT STAKE OR THE TOP OF THE LANDING DEVICE.

A SEMI-CIRCULAR LANDING ZONE MAY BE SUBSTITUTED FOR THE GUIDE RAILS (STANDARD CONSTRUCTION DETAIL # 7-3).

STANDARD CONSTRUCTION DETAIL #7-1 SKIMMER

NOT TO SCALE

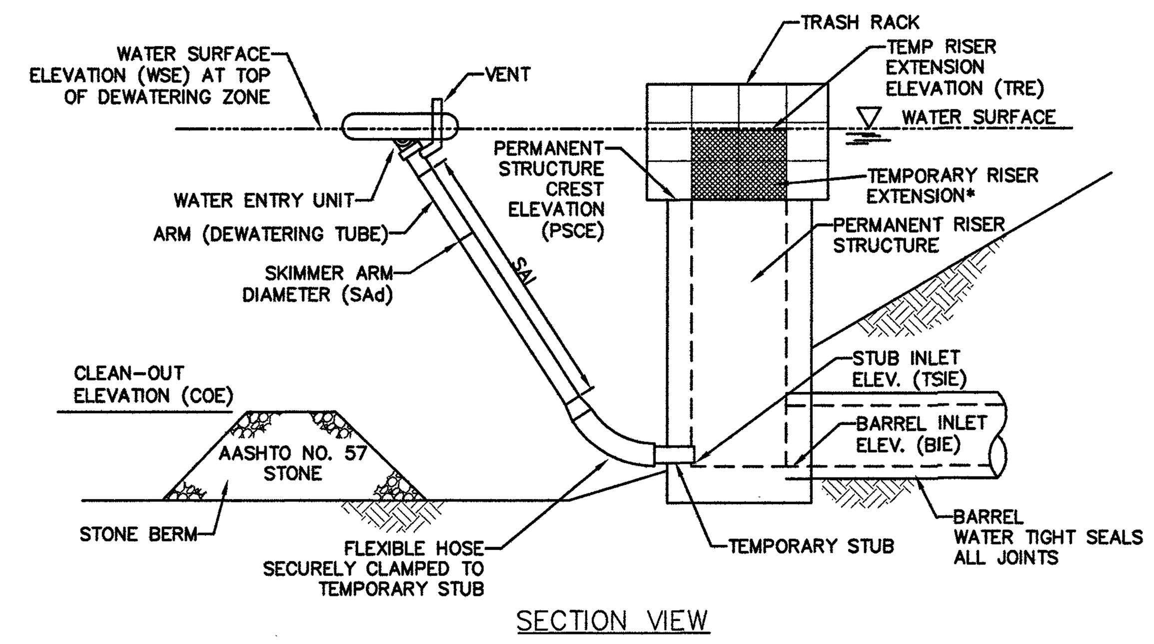

BASIN NO.	WATER SURFACE ELEV. WSE (FT)	SKIMMER: ORIFICE DIA. (IN)	ORIFICE HEAD (FT)	ARM DIA. SAd (IN)	ARM LENGTH SAL (FT)	ARM MAT'L	FLEXIBLE HOSE DIA. (IN)	FLEXIBLE HOSE LENGTH (IN)	FLEXIBLE HOSE MAT'L
1	93.55	4	0.275	≥4	10	PVC	≥4	24	PLASTIC

TEMPORARY STUB INSIDE DIA (IN)	TEMPORARY STUB INVERT ELEV TSIE (FT)	TEMPORARY STUB MAT'L	PERMANENT RISER CREST ELEV PSCE (FT)	PERMANENT RISER HORIZ OPENING LENGTH El (IN)	PERMANENT RISER HORIZ OPENING WIDTH Ew (IN)	RISER EXTENSION CREST ELEV TRE (FT)	RISER EXTENSION HORIZ OPENING LENGTH (IN)	RISER EXTENSION HORIZ OPENING WIDTH (IN)	BARREL INLET ELEV BIE (FT)
6	86.20	PVC	92.80	48	24	----	----	----	86.00

NOTES:

ALL ORIFICES ON PERMANENT RISER BELOW TEMPORARY RISER EXTENSION SHALL HAVE WATER-TIGHT TEMPORARY SEALS PROVIDED. TEMPORARY STUB INVERT ELEVATION SHALL BE SET AT OR BELOW SEDIMENT CLEAN-OUT ELEVATION.

A ROPE SHALL BE ATTACHED TO THE SKIMMER ARM TO FACILITATE ACCESS TO THE SKIMMER ONCE INSTALLED.

SKIMMER SHALL BE INSPECTED WEEKLY AND AFTER EACH RUNOFF EVENT.
ANY MALFUNCTIONING SKIMMER SHALL BE REPAIRED OR REPLACED WITHIN 24 HOURS OF INSPECTION.

ICE OR SEDIMENT BUILDUP AROUND THE PRINCIPAL SPILLWAY SHALL BE REMOVED SO AS TO ALLOW THE SKIMMER TO RESPOND TO FLUCTUATING WATER ELEVATIONS.

SEDIMENT SHALL BE REMOVED FROM THE BASIN WHEN IT REACHES THE LEVEL MARKED ON THE SEDIMENT CLEAN-OUT STAKE OR THE TOP OF THE STONE BERM. SEE STANDARD CONSTRUCTION DETAIL #7-3 FOR CONFIGURATION OF STONE BERM.

STANDARD CONSTRUCTION DETAIL #7-2
SKIMMER ATTACHED TO PERMANENT RISER

NOT TO SCALE

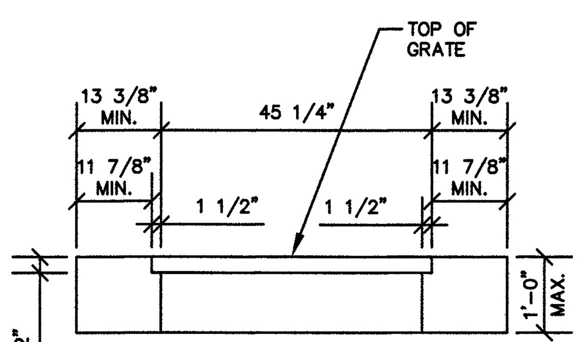

SECTION A–A

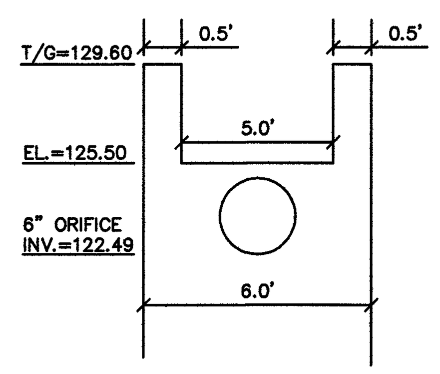

SECTION B–B
NOT TO SCALE

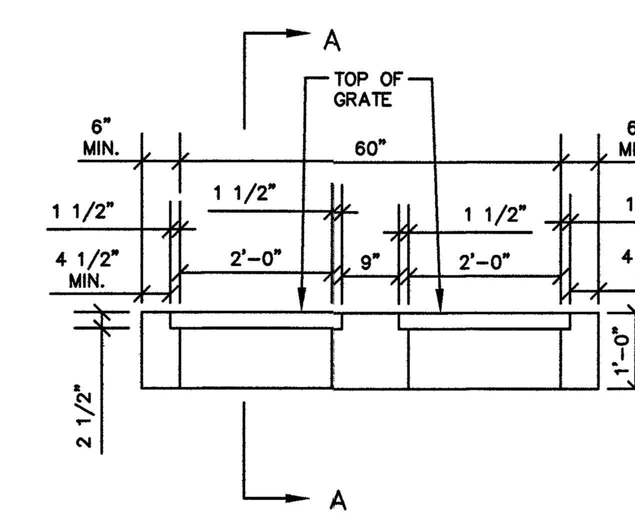

OUTLET WEIR TOP DETAIL
SCALE: 1/2"=1'-0"

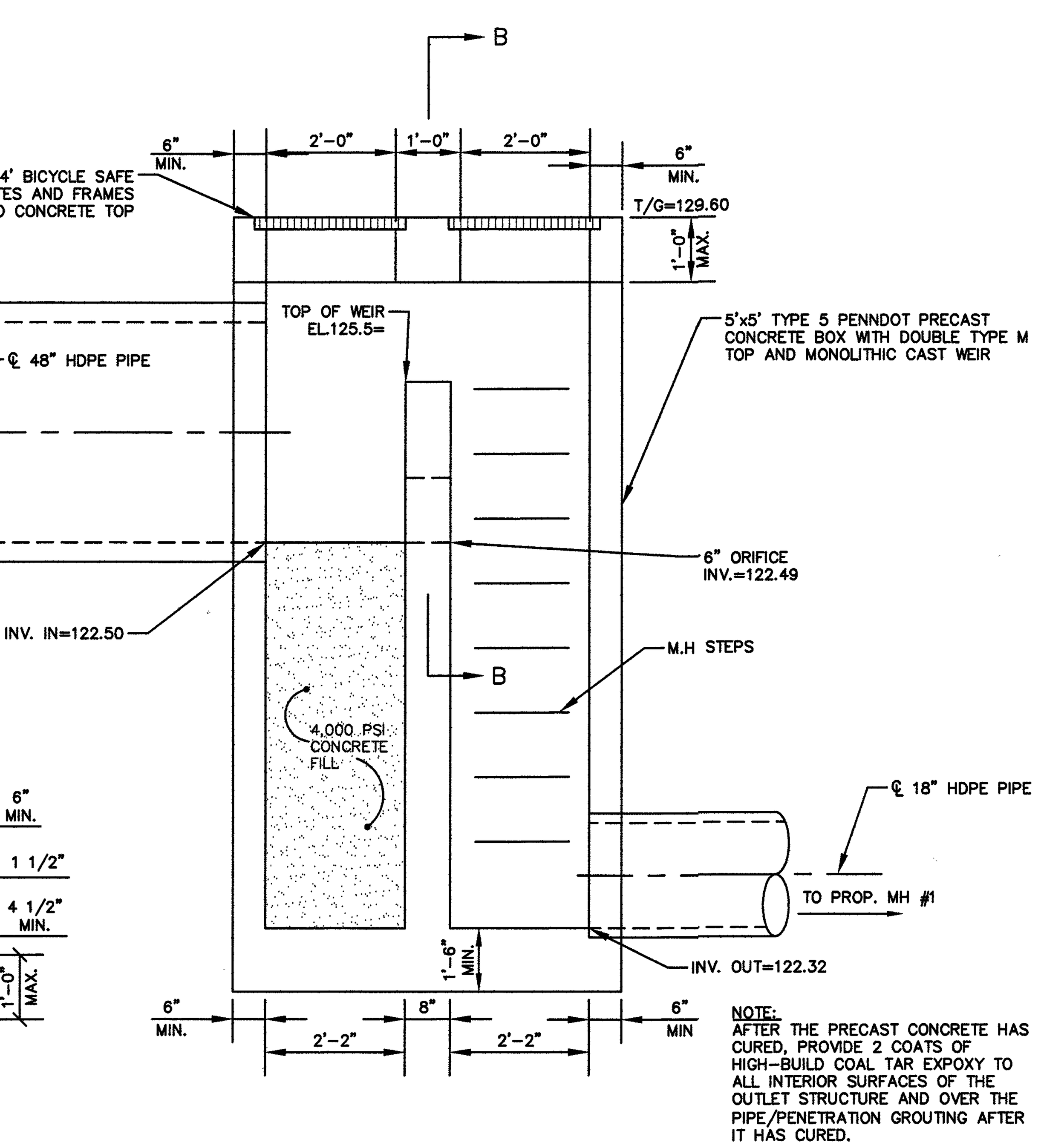

NOTE:
AFTER THE PRECAST CONCRETE HAS CURED, PROVIDE 2 COATS OF HIGH-BUILD COAL TAR EXPOXY TO ALL INTERIOR SURFACES OF THE OUTLET STRUCTURE AND OVER THE PIPE/PENETRATION GROUTING AFTER IT HAS CURED.

OUTLET WEIR DETAIL
NOT TO SCALE

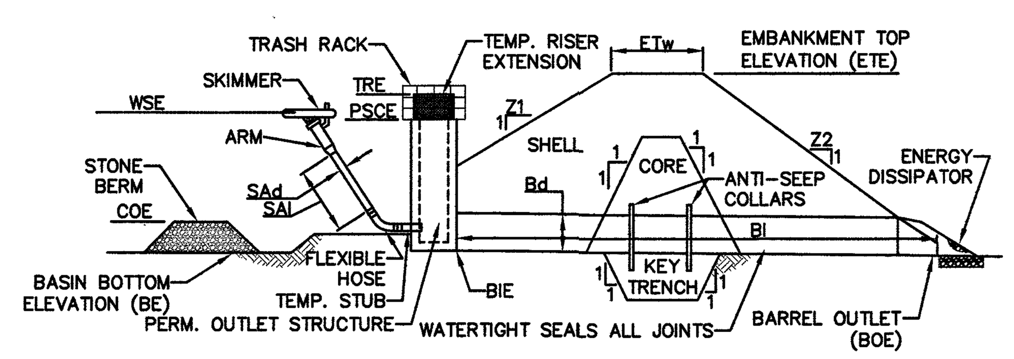

BASIN NO.	Z1 (FT)	Z2 (FT)	TEMP RISER EXT. ELEV TRE (FT)	EMBANKMENT TOP ELEV ETE (FT)	EMBANKMENT TOP WIDTH ETw (FT)	EMBANKMENT KEY TRENCH DEPTH (FT)	EMBANKMENT KEY TRENCH WIDTH (FT)	CLEAN OUT ELEV COE (FT)	BOTTOM ELEV BE (FT)
1	4	4	----	94.90	10	2	4	87.20	86.20

SKIMMER DIA SAd (IN)	SKIMMER LENGTH SAl (FT)	SKIMMER MAT'L	OUTLET BARREL DIA Bd (IN)	OUTLET BARREL INLET ELEV BIE (FT)	OUTLET BARREL MAT'L	OUTLET BARREL LENGTH Bl (FT)	OUTLET BARREL OUTLET ELEV BOE (FT)
≥4	10	PVC	18	86.0	RCP	190	84.10

NOTES:

SEDIMENT BASINS, INCLUDING ALL APPURTENANT WORKS, SHALL BE CONSTRUCTED TO THE DETAIL AND DIMENSIONS SHOWN ON THE E&S PLAN DRAWINGS.

AREA UNDER EMBANKMENT SHALL BE CLEARED, GRUBBED, AND STRIPPED OF TOPSOIL TO A DEPTH OF TWO FEET PRIOR TO ANY PLACEMENT AND COMPACTION OF EARTHEN FILL. IN ORDER TO FACILITATE MAINTENANCE AND RESTORATION, THE POOL AREA SHALL BE CLEARED OF ALL BRUSH, TREES, AND OBJECTIONABLE MATERIAL. FILL MATERIAL FOR THE EMBANKMENTS SHALL BE FREE OF ROOTS, OR OTHER WOODY VEGETATION, ORGANIC MATERIAL, LARGE STONES, AND OTHER OBJECTIONABLE MATERIALS. THE EMBANKMENT SHALL BE COMPACTED IN LAYERED LIFTS OF NOT MORE THAN 6 TO 9 IN. THE MAXIMUM ROCK SIZE SHALL BE NO GREATER THAN 2/3 THE LIFT THICKNESS.

UPON COMPLETION, THE EMBANKMENT SHALL BE SEEDED, MULCHED, BLANKETED OR OTHERWISE STABILIZED ACCORDING TO THE SPECIFICATIONS OF THE E&S PLAN DRAWINGS. TREES SHALL NOT BE PLANTED ON THE EMBANKMENT.

INSPECT ALL SEDIMENT BASINS ON AT LEAST A WEEKLY BASIS AND AFTER EACH RUNOFF EVENT. PROVIDE ACCESS FOR SEDIMENT REMOVAL AND OTHER REQUIRED MAINTENANCE ACTIVITIES. A CLEAN OUT STAKE SHALL BE PLACED NEAR THE CENTER OF EACH BASIN. ACCUMULATED SEDIMENT SHALL BE REMOVED WHEN IT HAS REACHED THE CLEAN OUT ELEVATION ON THE STAKE AND THE BASIN RESTORED TO ITS ORIGINAL DIMENSIONS. DISPOSE OF MATERIALS REMOVED FROM THE BASIN IN THE MANNER DESCRIBED IN THE E&S PLAN.

BASIN EMBANKMENTS, SPILLWAYS, AND OUTLETS SHALL BE INSPECTED FOR EROSION, PIPING AND SETTLEMENT. NECESSARY REPAIRS SHALL BE IMMEDIATELY. DISPLACED RIPRAP WITHIN THE OUTLET ENERGY DISSIPATER SHALL BE REPLACED IMMEDIATELY.

ACCUMULATED SEDIMENT SHALL BE REMOVED AND DISTURBED AREAS SHALL BE STABILIZED INSIDE THE BASIN BEFORE CONVERSION TO A STORMWATER MANAGEMENT FACILITY. THE DEVICE SHOWN IN STANDARD CONSTRUCTION DETAIL #7-16 MAY BE USED TO DEWATER SATURATED SEDIMENT PRIOR TO ITS REMOVAL. ROCK FILTERS SHALL BE ADDED AS NECESSARY.

STANDARD CONSTRUCTION DETAIL #7-4
SEDIMENT BASIN EMBANKMENT AND SPILLWAY DETAILS - SKIMMER

NOT TO SCALE

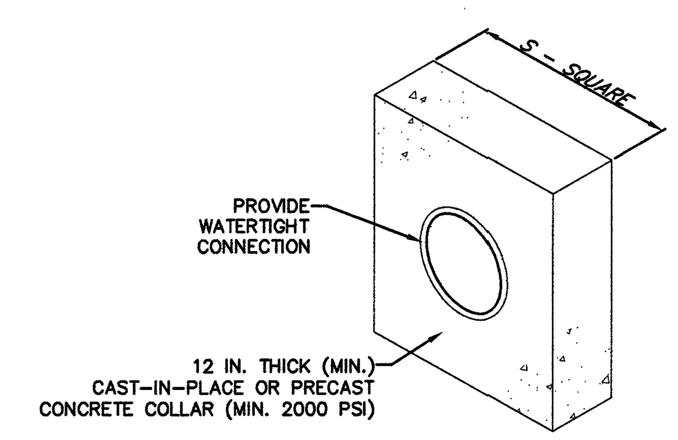

BASIN OR TRAP NO.	PIPE SIZE (IN)	S (IN)	NO. OF COLLARS	RISER TO FIRST COLLAR (FT)	COLLAR SPACING (FT)
1	18	78	2	15	15

NOTES:

ALL COLLARS SHALL BE INSTALLED SO AS TO BE WATERTIGHT.

COLLAR SIZE AND SPACING SHALL BE AS INDICATED WITHIN TABLE.

STANDARD CONSTRUCTION DETAIL #7-16
CONCRETE ANTI-SEEP COLLAR FOR
PERMANENT BASINS OR TRAPS

NOT TO SCALE

© 2004 THE GLAXOSMITHKLINE GROUP OF COMPANIES. ALL RIGHTS RESERVED. THIS DRAWING IS CONFIDENTIAL AND MAY NOT BE DISCLOSED, COPIED, ADAPTED OR REPRODUCED IN ANY FORM WHATSOEVER WITHOUT THE PRIOR WRITTEN CONSENT OF GLAXOSMITHKLINE.

NOTES | REFERENCE DRAWINGS | LEGEND

PAGE No.	DRAWING No.	TITLE

REVISION	DATE REVISED	CONTROL NUMBER

KEY PLAN

do more feel better live longer

UPPER MERION R&D FACILITIES
CAPITAL PROJECTS, ENGINEERING AND DESIGN
709 SWEDELAND ROAD
KING-OF-PRUSSIA, PA 19406
(610) 270-5261

SITE: UPPER MERION
BUILDING: CENTRAL UTILITIES PLANT
FLOOR:

Note: Previous Drawing Reference can be used for old drawing numbers or any previous reference that needs to be retained.

TITLE: PROPOSED CENTRAL UTILITIES PLANT (CUP) BUILDING

SHEET TITLE: EROSION AND SEDIMENT CONTROL DETAILS 2

DRN BY: T.L.C.	DRN BY DATE: 10/27/16	FILE REFERENCE: 5365SITE
CHKD BY: P.C.A.	CHKD BY DATE:	DRAWING STATUS:

PROJECT REF.:
SCALE @ E1: NOT TO SCALE
ORIGINAL CONTRACTOR DRAWING NO:(SEE NOTE ABOVE)
LEGACY GSK DRAWING DWG NO:(SEE NOTE ABOVE)
SHEET NO: 13 OF 21
GSK DRAWING NO.: 00-00-013
REV.:

SEAL:
COMMONWEALTH OF PENNSYLVANIA
REGISTERED PROFESSIONAL
PETER C. ANDERSEN
ENGINEER
PE-025269-E

ANDERSEN ENGINEERING ASSOCIATES INCORPORATED
306 NORTH FIFTH STREET, PERKASIE, PA
(215) 257-5711

FIELD BK/PG	AEA JOB NO.:	AEA FILE NO.:
-/-	5365	5365SITE

C:\Projects\5365\5365SITE.dwg, E&S DETAILS (2), 12/14/2016 4:45:13 PM, Spare

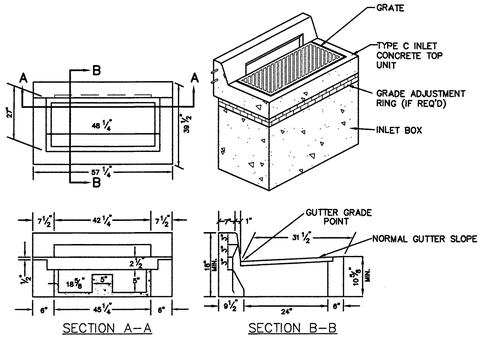

TYPE "C" INLET DETAIL

NOT TO SCALE

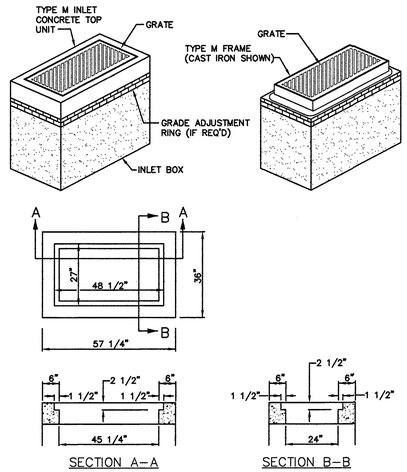

TYPE "M" INLET DETAIL

NOT TO SCALE

NOTES

1. CONSTRUCT INLET BOXES IN ACCORDANCE WITH THE REQUIREMENTS OF PUBLICATION 408, SECTION 214.
2. PERMIT ONLY PRECAST INLET BOXES SUPPLIED BY A MANUFACTURER LISTED IN BULLETIN 15. USE CLASS AA CEMENT CONC FOR PRECAST BOXES. FOR DEVIATIONS OR MODIFICATIONS OF THE STANDARDS, SUBMIT SHOP DRAWINGS FOR APPROVAL.
3. PROVIDE STANDARD INLET BOXES AND COVER ADJUSTMENT SLABS WITH A 610 x 1150 (24"x 46") OPENING TO ACCOMMODATE STANDARD TOP COMPONENTS.
4. FOR INLETS THAT DEVIATE FROM THE STANDARD SUBMIT SPECIAL DETAILS AND DESIGN FOR THE INLET WALLS AND BASE TO THE BUREAU OF CONSTRUCTION FOR REVIEW AND APPROVAL. CONSTRUCT INLETS THAT EXCEED 1500 (5') IN HEIGHT WITH STEPS SIMILAR TO MANHOLES (SEE RC-39M). FOR INLETS OTHER THAN AS SHOWN ON THE STANDARDS, PROVIDE REINFORCEMENT BASED ON PHL 93 (HS 25) LOADING AND IN ACCORDANCE WITH PUBLICATION 408.
5. LOCATE PIPE OR PIPES, AS INDICATED, WITH THE INLET BOTTOM SHAPED TO CHANNEL THE FLOW TOWARD THE OUTLET PIPE. WHEN PROJECT CONDITIONS REQUIRE PIPE BLOCKOUTS TO BE FORMED WITHIN 100 (4") FROM THE TOP OF THE INLET BOX, PROVIDE AN ADDITIONAL #10 (#3) REINFORCEMENT BAR LOCATED 40 (1 ½") FROM THE TOP OF THE INLET BASE, FULL WIDTH ALONG THE INLET FACE. REMOVE ANY VISIBLE PORTION OF THE BAR, IF REQUIRED DURING INSTALLATION AND PRIOR TO JOINING THE PIPE TO THE INLET. IF REINFORCED CONCRETE PIPE IS USED, THE PIPE BLOCKOUT MAY BE FORMED 'FLUSH' WITH THE INLET BASE. LIMIT PIPE BLOCKOUT OF WALL TO 25 mm (1").
6. PLACE SUBBASE MATERIAL MEETING THE REQUIREMENTS OF PUBLICATION 408, SECTION 350.2, IN LAYERS 100 (4") THICK, COMPACTED TO A DENSITY SATISFACTORY TO THE ENGINEER AND INCIDENTAL TO THE INLET PAY ITEM.
7. FOR PIPE DIAMETERS LARGER THAN 1200 (48") RCP OR 1350 (54") CMP, USE A MODIFIED INLET BOX, SHEET 9.
8. PROVIDE CONSTRUCTION JOINTS AS REQUIRED FOR INLET BOXES THAT ARE NOT MONOLITHIC. SEE DETAILS A & B SHEET 7.
9. TAPERS MAY BE PROVIDED ON VERTICAL FACES OF PRECAST INLET BOX BASE UNITS TO FACILITATE FORM STRIPPING. TAPERS WILL RESULT IN INTERNAL BOTTOM DIMENSIONS THAT VARY TO A MAXIMUM OF 25 mm (1").
10. PROVIDE SUITABLE LIFTING DEVICES FOR HANDLING AND INSTALLATION. GALVANIZE METAL DEVICES AS SPECIFIED IN PUB. 408 SECTION 1105. TAPERS MAY BE PROVIDED ON INSIDE VERTICAL FACES OF PRECAST INLET TOPS TO FACILITATE FORM STRIPPING. TAPERS WILL RESULT IN INTERNAL BOTTOM DIMENSIONS THAT VARY TO A MAXIMUM OF 25 mm (1").

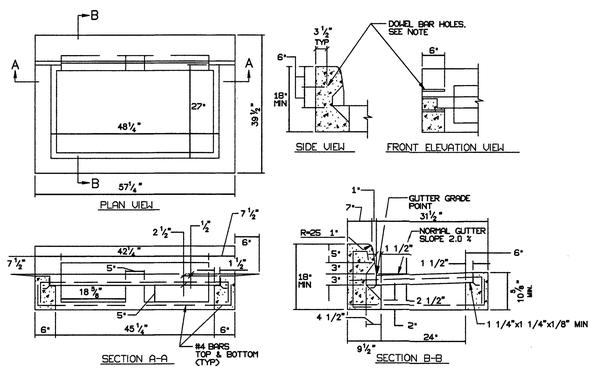

TYPE C CONCRETE TOP UNITS

NOT TO SCALE

NOTES

1. CONSTRUCTION REQUIREMENTS:
   A. CONSTRUCT IN ACCORDANCE WITH PUBLICATION 408, SECTIONS 605, 608 AND 714 AND AS MODIFIED HEREIN.
   B. MINIMUM CONCRETE CLASS:
      CAST-IN-PLACE CLASS A
      PRECAST CLASS AA
   C. PROVIDE STEEL REINFORCEMENT IN ACCORDANCE WITH PUBLICATION 408, SECTION 709. PROVIDE MINIMUM YIELD STRENGTH OF 60,000 PSI.
   D. CLEAR COVER FOR STEEL:
      WALLS: CAST-IN PLACE 2"
      PRECAST 1½"
      FOOTINGS: CAST-IN PLACE 2½" TOP BARS; 3" BOTTOM BARS; 2" SIDE COVER
      PRECAST 2" TOP BARS; 1½" BOTTOM BARS; 1½" SIDE COVER
      SLABS: CAST-IN PLACE 2" TOP & BOTTOM BARS
2. THIS SHEET DEPICTS THE VARIOUS COMPONENTS REQUIRED FOR COMPLETE INLET ASSEMBLIES.
3. EACH TYPE OF INLET SHOWN IS SUITED FOR A PARTICULAR SITUATION AS FOLLOWS:
   - TYPE C INLET IS DESIGNATED FOR INSTALLATION WITH NON-MOUNTABLE CURBS.
   - TYPE M INLET IS DESIGNATED FOR INSTALLATION IN MEDIAN AREAS AND MOUNTABLE CURBS.
   - TYPE S INLET IS DESIGNATED FOR INSTALLATION IN SHOULDER SWALE AREAS.
4. THE SELECTION OF COMPONENTS TO ACHIEVE A SPECIFIED INLET ASSEMBLY IS THE CONTRACTOR'S RESPONSIBILITY.
5. USE PRECAST CONCRETE OR STEEL GRADE ADJUSTMENT RINGS WHEN REQUIRED. REHABILITATION PROJECTS
6. FOR WALL REINFORCEMENT, BOTH DIRECTIONS, USE 10" MIN EACH WAY. EACH FACE 6" MAX. SPACING.
7. FOR FOOTING REINFORCEMENT, TOP AND BOTTOM, USE #4 BARS AT 12" CENTERS EACH WAY OR 1" MIN 8" MAX. SPACING.
8. ALL DIMENSIONS ARE IN INCHES UNLESS OTHERWISE NOTED.
9. PROVIDE WEEP HOLES ON INLET BOXES WHEN REQUIRED.
10. PIPES MAY BE CONNECTED TO DRAINAGE STRUCTURES (PRECAST INLETS, ETC.) WITH MORTAR OR watertight RUBBER FLEXIBLE CONNECTORS.

NOTES:

1. MATERIALS AND CONSTRUCTION SHALL MEET THE REQUIREMENTS OF PUBLICATION 408, SECTION 630 FOR PLAIN CEMENT CONCRETE CURB AND DEPRESSED CURB, SECTION 640 FOR PLAIN CEMENT CONCRETE CURB AND FOR PLAIN CEMENT CONCRETE CURB GUTTER.
2. SPACE CONTRACTION JOINTS IN UNIFORM LENGTHS OR SECTIONS.
3. PLACE 3/4" PREMOLDED EXPANSION JOINT FILLER MATERIAL AT STRUCTURES AND AT THE END OF THE WORK DAY. CUT MATERIAL TO CONFORM TO AREA ADJACENT TO CURB OR TO CONFORM TO CROSS SECTIONAL AREA OF CURB.

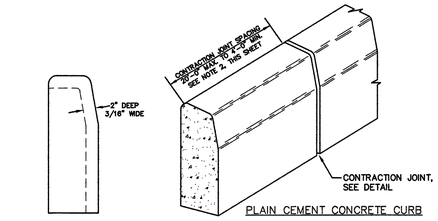

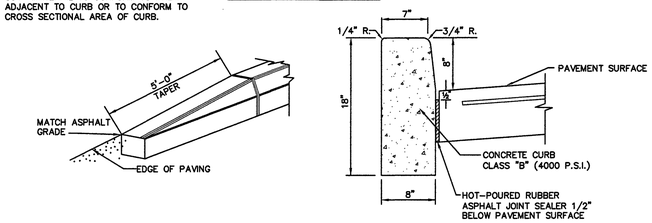

PLAIN CEMENT CONCRETE CURB & END TAPER
PENN.–D.O.T. #RC–64

NOT TO SCALE

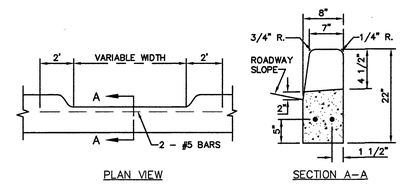

DEPRESSED CURB DETAIL

NOT TO SCALE

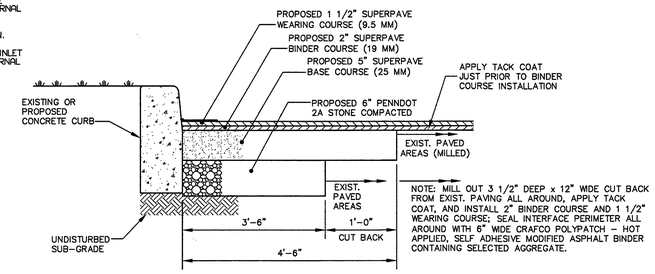

NOTE: MILL OUT 3 1/2" DEEP x 12" WIDE CUT BACK FROM EXIST. PAVING ALL AROUND, APPLY TACK COAT, AND INSTALL 2" BINDER COURSE AND 1 1/2" WEARING COURSE; SEAL INTERFACE PERIMETER ALL AROUND WITH 6" WIDE CRAFCO POLYPATCH – HOT APPLIED, SELF ADHESIVE MODIFIED ASPHALT BINDER CONTAINING SELECTED AGGREGATE.

NOTE: METHODS AND MATERIALS ARE TO BE PER MANUFACTURER'S REQUIREMENTS.

CURB/PAVING DETAIL

(CURB ADJACENT TO EXIST. PAVED AREAS)
NOT TO SCALE

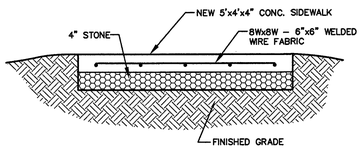

TYPICAL SIDEWALK DETAIL

NOT TO SCALE

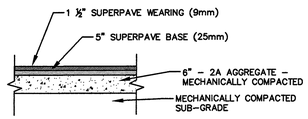

PAVING CROSS–SECTION

NOT TO SCALE

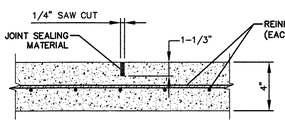

CONTRACTION JOINT DETAIL (SIDEWALK)

(SEE CONCRETE SIDEWALK SECTION FOR ADDITIONAL INFORMATION)
NOT TO SCALE

NOTE: THE JOINT SEALING MATERIAL IS TO BE SIKAFLEX–2C NS/SL POLYURETHANE ELASTOMERIC SEALANT. PREPARE SURFACES AND INSTALL SEALANT IN ACCORDANCE WITH THE MANUFACTURER'S REQUIREMENTS.

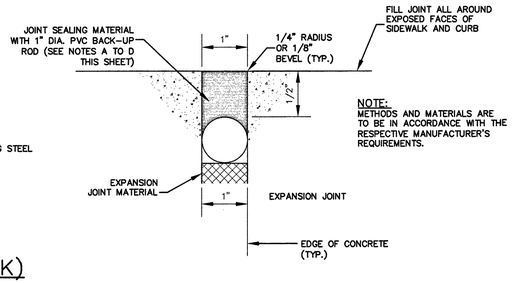

NOTE:
METHODS AND MATERIALS ARE TO BE IN ACCORDANCE WITH THE RESPECTIVE MANUFACTURER'S REQUIREMENTS.

SIDEWALK AND CURB EXPANSION JOINT DETAIL

NOT TO SCALE

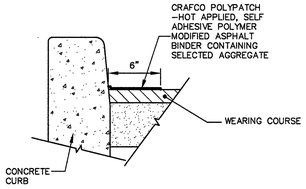

NOTE: METHODS AND MATERIALS ARE TO BE PER MANUFACTURER'S REQUIREMENTS.

CURB/PAVING SEALANT DETAIL

NOT TO SCALE

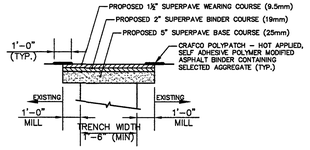

TRENCH RESTORATION PAVING DETAIL

NOT TO SCALE

NOTE: METHODS AND MATERIALS ARE TO BE IN ACCORDANCE WITH THE RESPECTIVE MANUFACTURER'S REQUIREMENTS.

© 2004 THE GLAXOSMITHKLINE GROUP OF COMPANIES. ALL RIGHTS RESERVED. THIS DRAWING IS CONFIDENTIAL AND MAY NOT BE DISCLOSED, COPIED, ADAPTED OR REPRODUCED IN ANY FORM WHATSOEVER WITHOUT THE PRIOR WRITTEN CONSENT OF GLAXOSMITHKLINE.

NOTES | REFERENCE DRAWINGS | LEGEND

PAGE No.	DRAWING No.	TITLE

REVISION	DATE REVISED	CONTROL NUMBER

KEY PLAN

do more feel better live longer

UPPER MERION R&D FACILITIES
CAPITAL PROJECTS, ENGINEERING AND DESIGN
709 SWEDELAND ROAD
KING-OF-PRUSSIA, PA 19406
(610) 270-5261

SITE: UPPER MERION
BUILDING: CENTRAL UTILITIES PLANT
FLOOR:

Note: Previous Drawing Reference can be used for old drawing numbers or any previous reference that needs to be retained.

TITLE: PROPOSED CENTRAL UTILITIES PLANT (CUP) BUILDING
SHEET TITLE: CONSTRUCTION DETAILS 1

DRN BY: T.L.C.	DRN BY DATE: 10/27/16	FILE REFERENCE: 5365SITE
CHKD BY: P.C.A.	CHKD BY DATE:	DRAWING STATUS:

PROJECT REF.:
SCALE @ E1: NOT TO SCALE
ORIGINAL CONTRACTOR DRAWING NO.(SEE NOTE ABOVE):
LEGACY GSK DRAWING DWG NO.(SEE NOTE ABOVE):
SHEET NO: 14 OF 21
GSK DRAWING NO.: 00-00-014
REV.:

SEAL:

ANDERSEN ENGINEERING ASSOCIATES INCORPORATED
306 NORTH FIFTH STREET, PERKASIE, PA
(215) 257-5711

FIELD BK/PG	AEA JOB NO.:	AEA FILE NO.:
–/–	5365	5365SITE

C:\Projects\5365\5365SITE.dwg, CON, DETAILS 1, 10/6/2016 1:29:57 PM, Spare

NOTES:

1. THE DEPTH OF THE INVERT CHANNEL SHALL BE EQUAL TO 3/4 OF THE DIAMETER OF THE SEWER.
2. THE SHELF SHALL SLOPE TOWARD THE INVERT CHANNEL AT A RATE OF 1" PER FOOT.
3. TYPE "B" MANHOLES (SHALLOW TYPE) TO BE PROVIDED WHERE REQUIRED BY DEPTH CONDITIONS. ALL OTHER MANHOLES TO BE TYPE "A".
4. THE WALL THICKNESS IN A 4'–0" DIA. PRECAST BASE SHALL BE AS FOLLOWS: FOR PIPES 16" AND SMALLER,–5" WALL, FOR PIPES 18" AND LARGER,–8" WALL.
5. ALL MANHOLE FRAMES FOR "OFF THE ROAD" MANHOLES SHALL BE BOLTED TO THE CONE SECTION OR CONCRETE SLAB WITH TWO 3/4" DIA. BOLTS WITH WASHERS AND NUTS. BOLTS TO BE AT 180° ON A 36" DIA. BOLT CIRCLE.
6. FOR MANHOLES HAVING A 5'–0" OR 6'–0" DIA BASES REDUCTION IN DIAMETER TO 4'–0" SHALL START AT THE FIRST JOINT ABOVE THE UPPERMOST PIPE CONNECTION, WHERE DEPTH IS SUFFICIENT.
7. EXTERIOR COATING OF ALL MANHOLES TO HAVE TWO COATS (16 mil DRY THICKNESS) OF KOPPERS SUPER SERVICE BLACK OR APPROVED EQUAL. INTERIOR COATING SHALL BE DOUBLE COATED WITH A WATERPROOF CORROSION RESISTANT COATING SUCH AS SIKAGARD 62 OR APPROVED EQUAL AND ACCORDING TO MANUFACTURER'S INSTRUCTIONS.

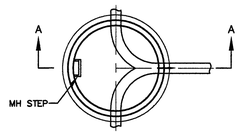

PLAN

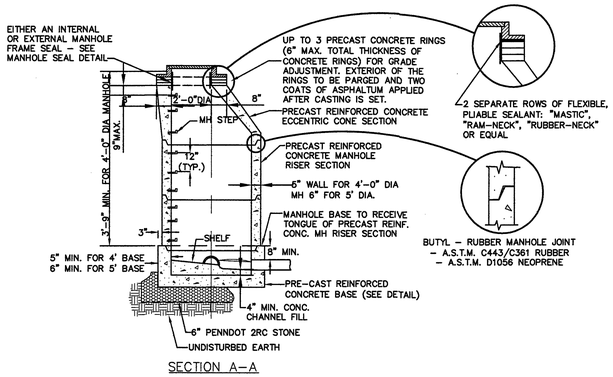

SECTION A–A

TYPE "A" STANDARD MANHOLE DETAIL

NOT TO SCALE

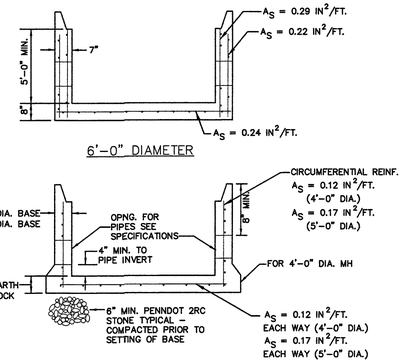

PRECAST BASE

N.T.S.

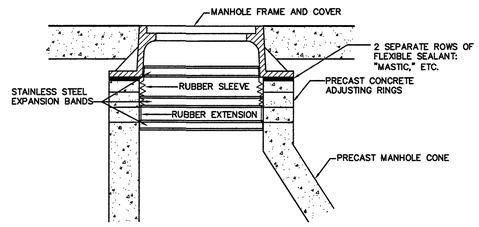

INTERNAL SEAL

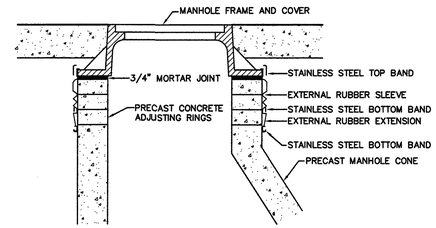

EXTERNAL SEAL

MANUFACTURED CHIMNEY TO FRAME SEAL

NOT TO SCALE

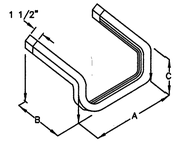

PRECAST MANHOLE (TYPE #1)

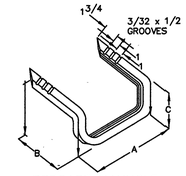

PRECAST MANHOLE (TYPE #2)

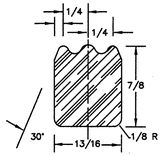

TYP. CROSS SECTION ON ALL STEPS

APPLICATION	DIMENSION (IN.)			
	A	B	C	D
PRECAST M.H. (TYPE 1)	13 3/4	10	3 3/4	—
PRECAST M.H. (TYPE 2)	13 3/4	11	3 3/4	—

PRECAST MANHOLE STEPS DETAILS

NOT TO SCALE

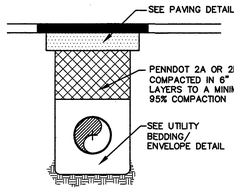

EXISTING ROADS

NOT TO SCALE

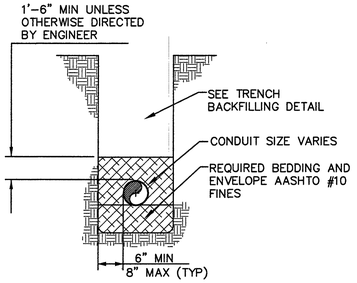

UTILITY BEDDING AND ENVELOPE

NOT TO SCALE

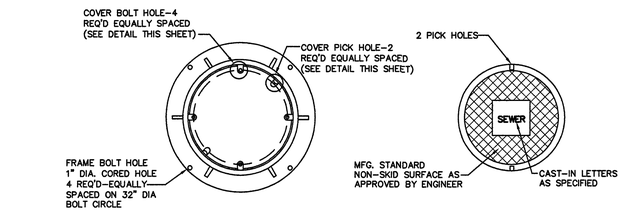

FRAME

COVER

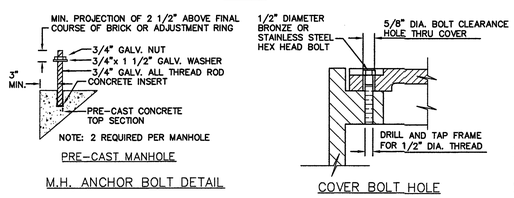

PRE–CAST MANHOLE

M.H. ANCHOR BOLT DETAIL

COVER BOLT HOLE

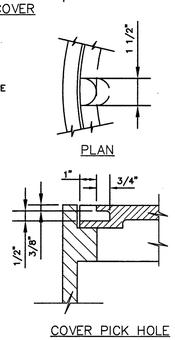

PLAN

COVER PICK HOLE

SPECIFICATIONS :
- ALL MATERIAL GRAY CAST IRON, A.S.T.M. A–48, CL30 SUITABLE FOR HIGHWAY LOADING
- ALL FRAMES & COVERS SHALL BE COATED WITH COAL TAR PITCH VARNISH
- COVER SHALL HAVE THE WORDS "PRA SEWER" CAST THEREON
- FRAMES SHALL BE WATERPROOF AND COVER SHALL BE BOLTED WITH FOUR (4) 1/2" COUNTERSUNK STAINLESS STEEL BOLTS MAKING A SEAL WITH A RUBBER "O" RING GASKET, OR EQUAL.
- PROVIDE FOUR (4) ANCHOR BOLT HOLES, 1" DIA. MIN.

WATERPROOF MANHOLE FRAME AND COVER

NOT TO SCALE

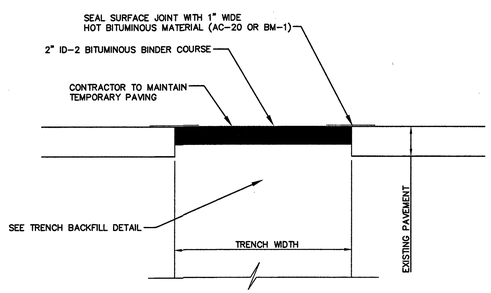

TEMPORARY TRENCH RESTORATION

NO SCALE

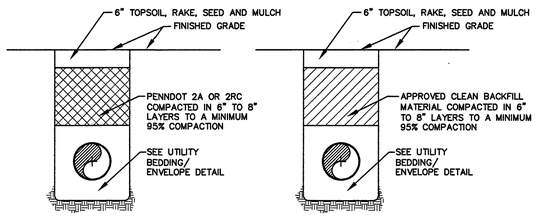

UNPAVED AREAS WITHIN 3' OF ROAD CARTWAY

NOT TO SCALE

UNPAVED AREAS OUTSIDE 3' OF ROAD CARTWAY

NOT TO SCALE

NOTES:
1. TRENCH COMPACTION TO BE TESTED, AT THE CONTRACTOR'S EXPENSE, IN ACCORDANCE WITH PENNDOT PUB 408, AS REQUIRED BY THE ENGINEER.
2. FILL MUST BE APPROVED BY THE ENGINEER PRIOR TO PLACEMENT IN THE TRENCH.
3. AREAS AROUND MANHOLES AND OTHER APPURTENANCES SHALL BE HAND COMPACTED AS DIRECTED BY THE ENGINEER.
4. SPECIAL CONDITIONS OF HIGHWAY OCCUPANCY PERMIT MAY SUPERCEDE THIS DETAIL.

UTILITY TRENCH BACKFILL

NOT TO SCALE

SEAL:

COMMONWEALTH OF PENNSYLVANIA REGISTERED PROFESSIONAL ENGINEER PETER C. ANDERSEN PE-022589-E

ANDERSEN ENGINEERING ASSOCIATES INCORPORATED
306 NORTH FIFTH STREET, PERKASIE, PA
(215) 257–5711

FIELD BK/PG	AEA JOB NO.:	AEA FILE NO.:
–/–	5365	5365SITE

© 2004 THE GLAXOSMITHKLINE GROUP OF COMPANIES. ALL RIGHTS RESERVED. THIS DRAWING IS CONFIDENTIAL AND MAY NOT BE DISCLOSED, COPIED, ADAPTED OR REPRODUCED IN ANY FORM WHATSOEVER WITHOUT THE PRIOR WRITTEN CONSENT OF GLAXOSMITHKLINE.

NOTES | REFERENCE DRAWINGS | LEGEND

PAGE No.	DRAWING No.	TITLE

REVISION	DATE REVISED	CONTROL NUMBER

KEY PLAN

do more feel better live longer

UPPER MERION R&D FACILITIES
CAPITAL PROJECTS, ENGINEERING AND DESIGN
709 SWEDELAND ROAD
KING OF PRUSSIA, PA 19406
(610) 270-5261

SITE: UPPER MERION
BUILDING: CENTRAL UTILITIES PLANT
FLOOR:

Note: Previous Drawing Reference can be used for old drawing numbers or any previous reference that needs to be retained.

TITLE: PROPOSED CENTRAL UTILITIES PLANT (CUP) BUILDING
SHEET TITLE: CONSTRUCTION DETAILS 2

DRN BY:	DRN BY DATE:	FILE REFERENCE:
T.L.C.	10/27/16	5365SITE
CHKD BY: P.C.A.	CHKD BY DATE:	DRAWING STATUS:

PROJECT REF.:
SCALE @ E1: NOT TO SCALE
ORIGINAL CONTRACTOR DRAWING NO:(SEE NOTE ABOVE)
LEGACY GSK DRAWING DWG NO:(SEE NOTE ABOVE)
SHEET NO.: 15 OF 21
GSK DRAWING NO.: 00-00-015
REV.:

C:\Projects\5365\5365SITE.dwg, CON, DETAILS 2, 12/6/2016 11:41:05 AM, Spare

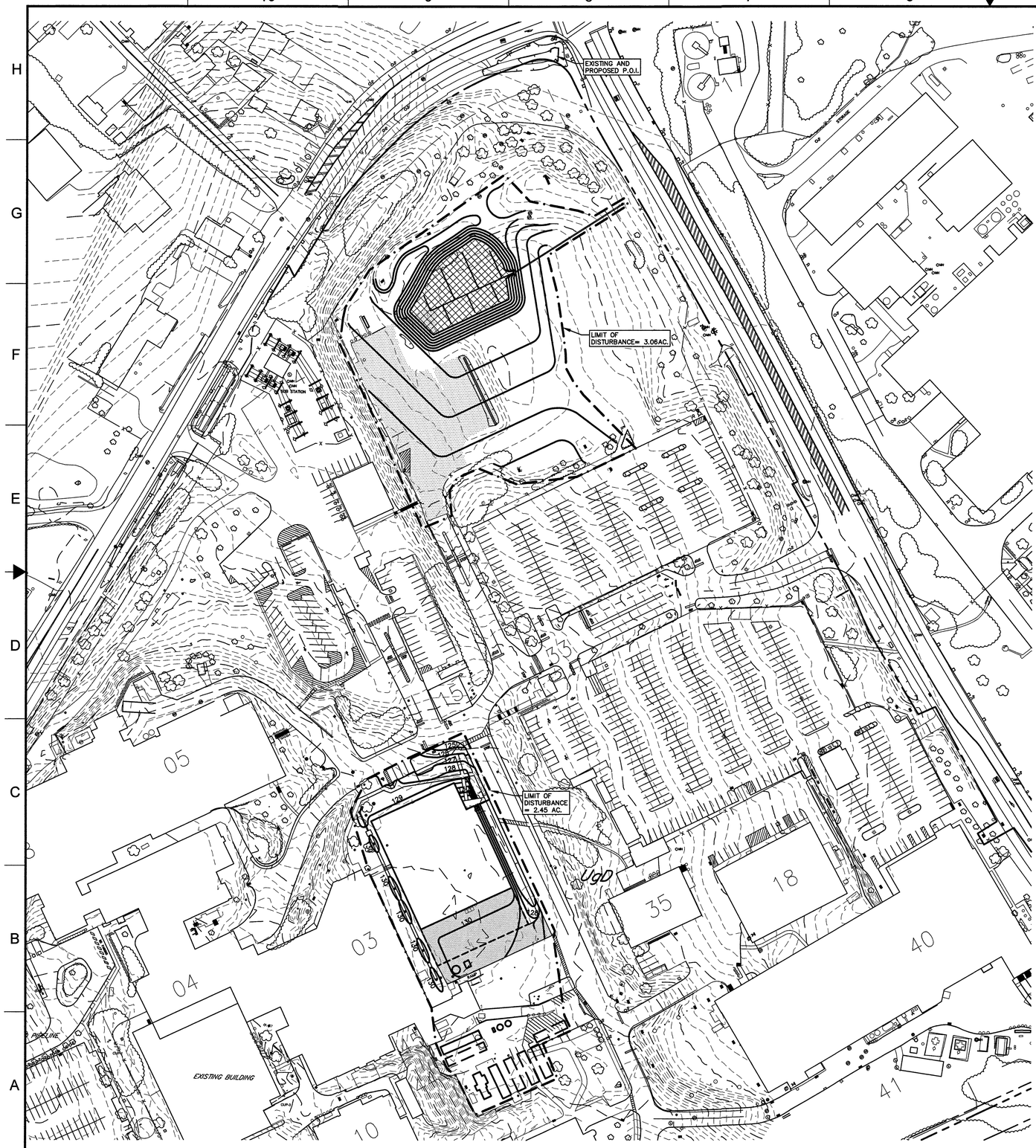

NOTE:
THE NPDES BOUNDARY IS THE ENTIRE GSK PROPERTY – SEE LOCATION MAP

LEGEND:

- EXISTING CONTOURS
- EXISTING WOODS
- EXISTING BRUSH
- EXISTING RIGHT-OF-WAY LINE
- EXISTING FENCE
- PROPOSED FENCE
- EXISTING EDGE OF PAVEMENT
- EXISTING LIGHT
- EXISTING UNDERGROUND COMMUNICATIONS
- EXISTING UNDERGROUND ELECTRIC
- EXISTING UNDERGROUND GAS LINE
- EXISTING WATER LINE
- PROPOSED CONTOUR
- EXISTING CURB
- PROPOSED CURB
- PROPOSED FLUSH CURB
- EXISTING PAINT STRIPING
- PROPOSED PAINT STRIPING
- EXISTING SANITARY SEWER
- EXISTING STORM SEWER, MANHOLE AND INLET
- PROPOSED STORM SEWER, MANHOLE AND INLET
- EXISTING SIDEWALK
- PROPOSED SIDEWALK
- COMPOST SILT SOCK WITH SIZE
- WATERSHED/STORMWATER MANAGEMENT LINE
- LIMIT OF DISTURBANCE
- NPDES BOUNDARY LINE
- SOILS BOUNDARY LINE
- EXISTING PAVEMENT TO BE REPLACED
- PROPOSED PAVEMENT
- EXISTING PAVEMENT CONVERTED TO LANDSCAPING

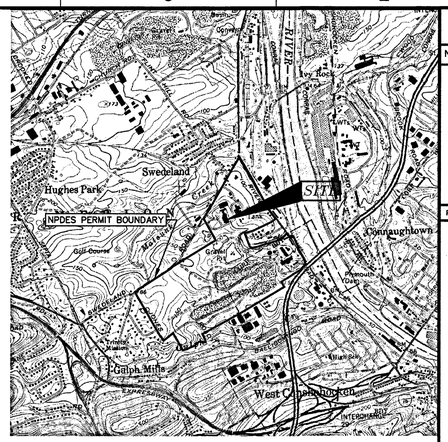

USGS LOCATION MAP
SOURCE: NORRISTOWN, PA QUAD
SCALE: 1"=2000'

SCHUYLKILL RIVER – CHAPTER 93 CLASS WWF, MF
EXISTING USE – WWF, MF

SOILS MAP
SCALE: 1"=1000'
SOURCE: USDA NRCS WEB SOIL SURVEY

SCHUYKILL RIVER – CHAPTER 93 CLASS WWF, MF
EXISTING USE – WWF, MF
(NO HQ OR EV WATERSHEDS)

GRAPHIC SCALE
80 0 40 80 160 320
(IN FEET)
1 inch = 80'

© 2004 THE GLAXOSMITHKLINE GROUP OF COMPANIES. ALL RIGHTS RESERVED. THIS DRAWING IS CONFIDENTIAL AND MAY NOT BE DISCLOSED, COPIED, ADAPTED OR REPRODUCED IN ANY FORM WHATSOEVER WITHOUT THE PRIOR WRITTEN CONSENT OF GLAXOSMITHKLINE

NOTES	REFERENCE DRAWINGS	LEGEND

PAGE No.	DRAWING No.	TITLE

REVISION	DATE REVISED	CONTROL NUMBER

KEY PLAN

do more feel better live longer

UPPER MERION R&D FACILITIES
CAPITAL PROJECTS, ENGINEERING AND DESIGN
709 SWEDELAND ROAD
KING-OF-PRUSSIA, PA 19406
(610) 270-5261

SITE: UPPER MERION
BUILDING: CENTRAL UTILITIES PLANT
FLOOR:

Note: Previous Drawing Reference can be used for old drawing numbers or any previous reference that needs to be retained.

TITLE: PROPOSED CENTRAL UTILITIES PLANT (CUP) BUILDING

SHEET TITLE: OVERALL POST CONSTRUCTION STORMWATER MANAGEMENT PLAN

DRN BY:	DRN BY DATE:	FILE REFERENCE:
T.L.C.	10/27/16	5365SITE
CHKD BY: P.C.A.	CHKD BY DATE:	DRAWING STATUS:

PROJECT REF.:
SCALE @ E1: 1" = 80'
ORIGINAL CONTRACTOR DRAWING NO.(SEE NOTE ABOVE)
LEGACY GSK DRAWING DWG NO.(SEE NOTE ABOVE)
SHEET NO: 16 OF 21

SEAL: COMMONWEALTH OF PENNSYLVANIA REGISTERED PROFESSIONAL PETER C. ANDERSEN ENGINEER PE-042269-E

ANDERSEN ENGINEERING ASSOCIATES INCORPORATED
306 NORTH FIFTH STREET, PERKASIE, PA
(215) 257-5711

FIELD BK/PG	AEA JOB NO.:	AEA FILE NO.:
–/–	5365	5365SITE

GSK DRAWING NO.: 00-00-016
REV.:

C:\Projects\5365\5365SITE.dwg, PCMA, 12/5/2016 10:02:47 AM, Spare

© 2004 THE GLAXOSMITHKLINE GROUP OF COMPANIES. ALL RIGHTS RESERVED. THIS DRAWING IS CONFIDENTIAL AND MAY NOT BE DISCLOSED, COPIED, ADAPTED OR REPRODUCED IN ANY FORM WHATSOEVER WITHOUT THE PRIOR WRITTEN CONSENT OF GLAXOSMITHKLINE.

NOTES | REFERENCE DRAWINGS | LEGEND

PAGE No.	DRAWING No.	TITLE

REVISION	DATE REVISED	CONTROL NUMBER

KEY PLAN

GRAPHIC SCALE
40 0 20 40 80 160
(IN FEET)
1 inch = 40'

SEAL:

ANDERSEN ENGINEERING ASSOCIATES INCORPORATED
306 NORTH FIFTH STREET, PERKASIE, PA
(215) 257-5711

do more feel better live longer

UPPER MERION R&D FACILITIES
CAPITAL PROJECTS, ENGINEERING AND DESIGN
709 SWEDELAND ROAD
KING-OF-PRUSSIA, PA 19406
(610) 270-5261

SITE: UPPER MERION
BUILDING: CENTRAL UTILITIES PLANT
FLOOR:

Note: Previous Drawing Reference can be used for old drawing numbers or any previous reference that needs to be retained.

TITLE: PROPOSED CENTRAL UTILITIES PLANT (CUP) BUILDING

SHEET TITLE: ENLARGED POST CONSTRUCTION STORMWATER MANAGEMENT PLAN

DRN BY:	DRN BY DATE:	FILE REFERENCE:
T.L.C.	10/27/16	5365SITE
CHKD BY: P.C.A.	CHKD BY DATE:	DRAWING STATUS:

PROJECT REF.:
ORIGINAL CONTRACTOR DRAWING NO:(SEE NOTE ABOVE)
LEGACY GSK DRAWING DWG NO:(SEE NOTE ABOVE)
SCALE @ E1: 1" = 40'
SHEET NO: 17 OF 21

FIELD BK/PG	AEA JOB NO.:	AEA FILE NO.:	GSK DRAWING NO.:	REV.:
-/-	5365	5365SITE	00-00-017	

C:\Projects\5365\5365SITE.dwg, PCDM ENLARGED, 12/9/2016 9:48:48 AM, Spare

© 2004 THE GLAXOSMITHKLINE GROUP OF COMPANIES. ALL RIGHTS RESERVED. THIS DRAWING IS CONFIDENTIAL AND MAY NOT BE DISCLOSED, COPIED, ADAPTED OR REPRODUCED IN ANY FORM WHATSOEVER WITHOUT THE PRIOR WRITTEN CONSENT OF GLAXOSMITHKLINE.

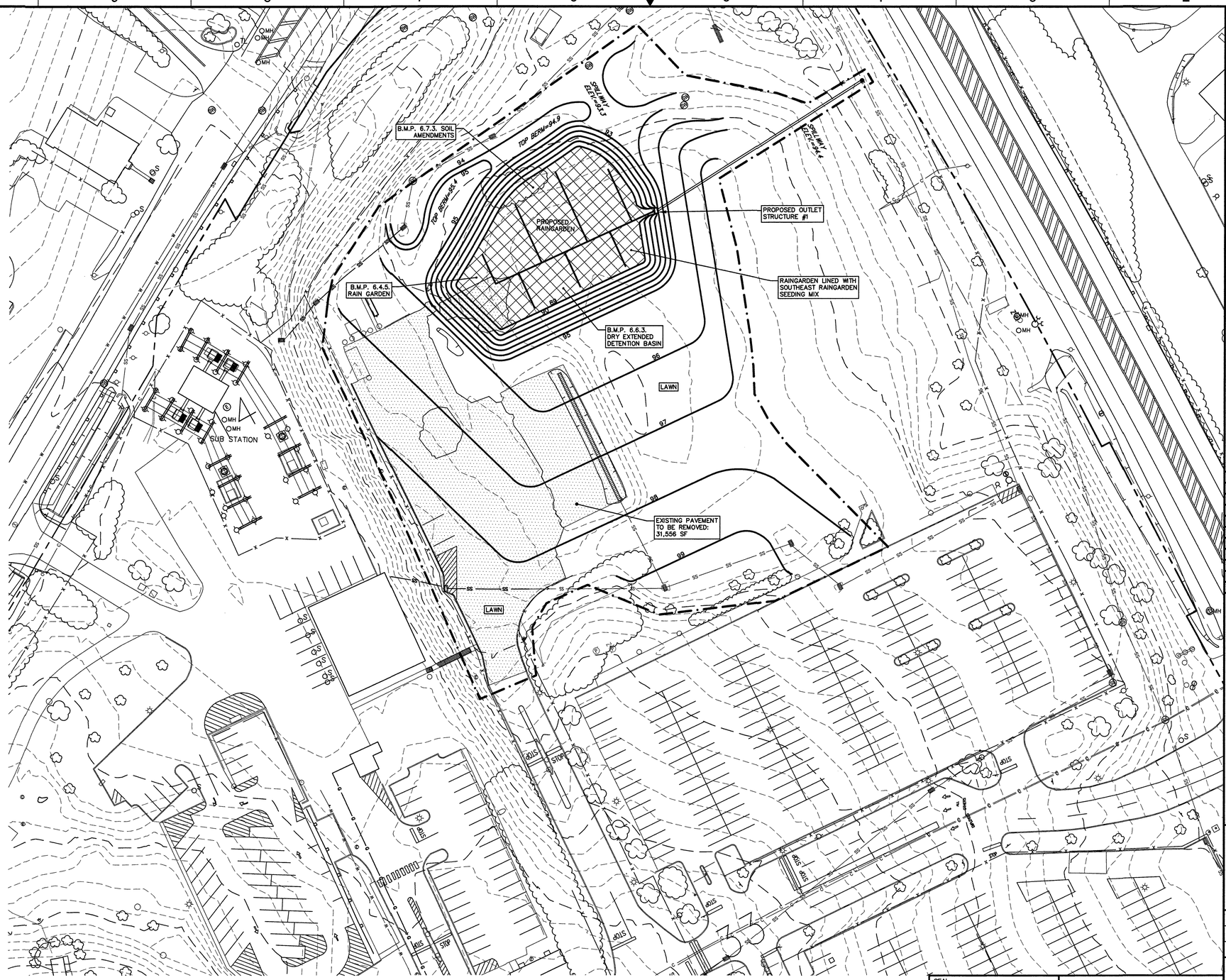

LEGEND:

- EXISTING CONTOURS
- EXISTING WOODS
- EXISTING BRUSH
- EXISTING RIGHT-OF-WAY LINE
- EXISTING FENCE
- PROPOSED FENCE
- EXISTING EDGE OF PAVEMENT
- EXISTING LIGHT
- EXISTING UNDERGROUND COMMUNICATIONS
- EXISTING UNDERGROUND ELECTRIC
- EXISTING UNDERGROUND GAS LINE
- EXISTING WATER LINE
- PROPOSED CONTOUR
- EXISTING CURB
- PROPOSED CURB
- PROPOSED FLUSH CURB
- EXISTING PAINT STRIPING
- PROPOSED PAINT STRIPING
- EXISTING SANITARY SEWER
- EXISTING STORM SEWER, MANHOLE AND INLET
- PROPOSED STORM SEWER, MANHOLE AND INLET
- EXISTING SIDEWALK
- PROPOSED SIDEWALK
- COMPOST SILT SOCK WITH SIZE
- WATERSHED/STORMWATER MANAGEMENT LINE
- LIMIT OF DISTURBANCE
- NPDES BOUNDARY LINE
- SOILS BOUNDARY LINE
- EXISTING PAVEMENT TO BE REPLACED
- PROPOSED PAVEMENT
- EXISTING PAVEMENT CONVERTED TO LANDSCAPING

GRAPHIC SCALE

40 0 20 40 80 160

(IN FEET)
1 inch = 40'

SEAL:

COMMONWEALTH OF PENNSYLVANIA REGISTERED PROFESSIONAL PETER Q. ANDERSEN ENGINEER 025269-E

ANDERSEN ENGINEERING ASSOCIATES INCORPORATED
306 NORTH FIFTH STREET, PERKASIE, PA
(215) 257-5711

FIELD BK/PG	AEA JOB NO.:	AEA FILE NO.:
-/-	5365	5365SITE

NOTES | REFERENCE DRAWINGS | LEGEND

PAGE No.	DRAWING No.	TITLE

REVISION	DATE REVISED	CONTROL NUMBER

KEY PLAN

do more feel better live longer

UPPER MERION R&D FACILITIES
CAPITAL PROJECTS, ENGINEERING AND DESIGN
709 SWEDELAND ROAD
KING-OF-PRUSSIA, PA 19406
(610) 270-5281

SITE: UPPER MERION
BUILDING: CENTRAL UTILITIES PLANT
FLOOR:

Note: Previous Drawing Reference can be used for old drawing numbers or any previous reference that needs to be retained.

TITLE: PROPOSED CENTRAL UTILITIES PLANT (CUP) BUILDING

SHEET TITLE: RAINGARDEN POST CONSTRUCTION STORMWATER MANAGEMENT PLAN

DRN BY:	DRN BY DATE:	FILE REFERENCE:
T.L.C.	10/27/16	5365SITE
CHKD BY:	CHKD BY DATE:	DRAWING STATUS:
P.C.A.		

PROJECT REF.:
SCALE @ E1: 1" = 40'
ORIGINAL CONTRACTOR DRAWING NO.(SEE NOTE ABOVE):
LEGACY GSK DRAWING DWG NO.(SEE NOTE ABOVE):
SHEET NO: 18 OF 21
GSK DRAWING NO.: 00-00-018
REV.:

C:\Projects\5365\5365SITE.dwg PCSM RAINGARDEN, 12/14/2016 4:46:01 PM, Spam

ALL PCSM BMPS WILL BE OWNED, OPERATED AND MAINTAINED BY GLAXOSMITHKLINE AND GLAXOSMITHKLINE SHALL BE THE RESPONSIBLE PARTY FOR THE NPDES PERMIT.

NPDES PERMIT NOTES:

1. ANY ON-SITE OR OFF-SITE WASTE OR BORROW AREA MUST HAVE AN APPROVED E&SC PLAN AND AN NPDES PERMIT FOR STORM WATER DISCHARGE (AS APPLICABLE).

2. THE PERMITTEE AND CO-PERMITTEE(S) ARE RESPONSIBLE FOR THE DESIGN, INSTALLATION, OPERATION AND MAINTENANCE OF THE BMPS IDENTIFIED IN THE E&S PLAN, PCSM PLAN, AND PPC PLAN. THE PERMITTEE AND CO-PERMITTEE(S) SHALL TAKE ALL REASONABLE STEPS TO PREVENT, MINIMIZE OR CEASE ANY DISCHARGE IN VIOLATION OF THE NPDES PERMIT.

3. ALL DISCHARGES COVERED BY THE NPDES PERMIT SHALL BE COMPOSED ENTIRELY OF STORM WATER. DISCHARGES OF MATERIAL OTHER THAN STORM WATER MUST BE IN COMPLIANCE WITH AN NPDES PERMIT (OTHER THAN THIS PERMIT) ISSUED FOR THE DISCHARGE. DISCHARGE OF SEWAGE OR INDUSTRIAL WASTE (OTHER THAN SEDIMENT UNDER THIS PERMIT) TO AN E&S BMP IS NOT PERMITTED. THE PERMITTEE/CO-PERMITTEE MAY NOT DISCHARGE FLOATING MATERIALS, OIL GREASE, SCUM, FOAM, SHEEN, AND SUBSTANCES WHICH: PRODUCE ODOR, TASTE, OR TURBIDITY; OR SETTLE TO FORM DEPOSITS IN CONCENTRATIONS OR AMOUNTS SUFFICIENT TO BE, OR CREATE A DANGER OF BEING, INIMICAL TO THE WATER USES TO BE PROTECTED OR HUMAN, ANIMAL, PLANT OR AQUATIC LIFE.

4. INSPECTION, REPORTING, AND MONITORING:

A. EXCEPT FOR DATA DETERMINED TO BE CONFIDENTIAL UNDER SECTION 607 OF THE CLEAN STREAMS LAW (35 P.S. §691.607), ALL REPORTS PREPARED IN ACCORDANCE WITH THE TERMS OF THIS PERMIT SHALL BE AVAILABLE FOR PUBLIC INSPECTION AT THE OFFICES OF THE DEPARTMENT OR AUTHORIZED CONSERVATION DISTRICT. AS REQUIRED BY THE CLEAN WATER ACT, THE CLEAN STREAMS LAWS, AND 25 PA. CODE, AND THE DEPARTMENT'S REGULATIONS, PERMIT APPLICATIONS, PERMITS, AND OTHER DOCUMENTS RELATED TO THIS PERMIT SHALL NOT BE CONSIDERED CONFIDENTIAL.

B. THE PERMITTEE AND CO-PERMITTEE(S) SHALL RETAIN RECORDS OF ALL MONITORING INFORMATION INCLUDING COPIES OF ALL MONITORING AND INSPECTION REPORTS REQUIRED BY THIS PERMIT, AND RECORDS OF DATA USED TO COMPLETE THE NOTICE OF INTENT FOR THIS PERMIT, FOR A PERIOD OF THREE YEARS FROM THE DATE OF THE TERMINATION OF COVERAGE UNDER THE PERMIT.

C. THE PERMITTEE AND CO-PERMITTEE(S) MUST ENSURE THAT VISUAL SITE INSPECTIONS ARE CONDUCTED WEEKLY, AND WITHIN 24 HOURS AFTER EACH STORM WATER EVENT THROUGHOUT THE DURATION OF CONSTRUCTION AND UNTIL THE RECEIPT AND ACKNOWLEDGEMENT OF THE NOT BY THE DEPARTMENT OR AUTHORIZED CONSERVATION DISTRICT. THE VISUAL SITE INSPECTIONS AND REPORTS SHALL BE COMPLETED IN A FORMAT PROVIDED BY THE DEPARTMENT, AND CONDUCTED BY QUALIFIED PERSONNEL, TRAINED AND EXPERIENCED IN EROSION AND SEDIMENT CONTROL, TO ASCERTAIN THAT E&S BMPS AND PCSM BMPS ARE PROPERLY CONSTRUCTED AND MAINTAINED TO EFFECTIVELY PREVENT POLLUTION TO THE WATERS OF THIS COMMONWEALTH. A WRITTEN REPORT OF EACH INSPECTION SHALL BE KEPT AND INCLUDE AT A MINIMUM:

(1) A SUMMARY OF SITE CONDITIONS, E&S BMP AND PCSM BMP, IMPLEMENTATION AND MAINTENANCE AND COMPLIANCE ACTIONS; AND

(2) THE DATE, TIME, NAME AND SIGNATURE OF THE PERSON CONDUCTING THE INSPECTION.

D. WHERE E&S OR PCSM BMPS ARE FOUND TO BE INOPERATIVE OR INEFFECTIVE DURING AN INSPECTION, OR ANY OTHER TIME, THE PERMITTEE AND CO-PERMITTEE(S) SHALL IMMEDIATELY CONTACT THE DEPARTMENT OR AUTHORIZED CONSERVATION DISTRICT, BY PHONE OR PERSONAL CONTACT, FOLLOWED BY THE SUBMISSION OF A WRITTEN REPORT WITHIN 5 DAYS OF THE INITIAL CONTACT. NONCOMPLIANCE REPORTS SHALL INCLUDE THE FOLLOWING INFORMATION:

(1) ANY CONDITION ON THE PROJECT SITE WHICH MAY ENDANGER PUBLIC HEALTH, SAFETY, OR THE ENVIRONMENT, OR INVOLVE INCIDENTS WHICH CAUSE OR THREATEN POLLUTION;

(2) THE PERIOD OF NONCOMPLIANCE, INCLUDING EXACT DATES AND TIMES AND/OR ANTICIPATED TIME WHEN THE ACTIVITY WILL RETURN TO COMPLIANCE;

(3) STEPS BEING TAKEN TO REDUCE, ELIMINATE, AND PREVENT RECURRENCE OF THE NONCOMPLIANCE; AND

(4) THE DATE OR SCHEDULE OF DATES, AND IDENTIFYING REMEDIES FOR CORRECTING NONCOMPLIANCE CONDITIONS.

5. PURSUANT TO SECTIONS 5(B) AND 305 OF THE PENNSYLVANIA CLEAN STREAMS LAW (35 P.S. §§691.5(B) AND 691.305), 25 PA. CODE CHAPTER 92, AND §1917-A OF THE ADMINISTRATIVE CODE, THE PERMITTEE AND CO-PERMITTEE SHALL ALLOW THE HEAD OF THE DEPARTMENT, THE EPA REGIONAL ADMINISTRATOR, AND/OR AN AUTHORIZED REPRESENTATIVE OF EPA, DEP, CONSERVATION DISTRICT OR, IN THE CASE OF A FACILITY WHICH DISCHARGES TO A MUNICIPAL SEPARATE STORM SEWER, AN AUTHORIZED REPRESENTATIVE OF THE MUNICIPAL OPERATOR OR THE SEPARATE STORM SEWER RECEIVING THE DISCHARGE, UPON THE PRESENTATION OF CREDENTIALS AND OTHER DOCUMENTS, AS MAY BE REQUIRED BY LAW, TO:

A. ENTER UPON THE PERMITTEE'S OR CO-PERMITTEE'S PREMISES WHERE A REGULATED FACILITY OR ACTIVITY IS LOCATED OR CONDUCTED OR WHERE RECORDS MUST BE KEPT UNDER THE CONDITIONS OF THIS PERMIT;

B. HAVE ACCESS TO AND COPY, AT REASONABLE TIMES, ANY RECORDS THAT MUST BE KEPT UNDER THE TERMS AND CONDITIONS OF THIS PERMIT;

C. INSPECT ANY FACILITIES OR EQUIPMENT (INCLUDING MONITORING AND CONTROL EQUIPMENT); AND

D. OBSERVE OR SAMPLE ANY DISCHARGE OF STORM WATER.

6. COMPLIANCE RESPONSIBILITIES

A. THE PERMITTEE AND CO-PERMITTEE MUST COMPLY WITH ALL TERMS AND CONDITIONS OF THE NPDES PERMIT. ANY PERMIT NONCOMPLIANCE CONSTITUTES A VIOLATION OF THE PENNSYLVANIA CLEAN STREAMS LAW AND THE FEDERAL CLEAN WATER ACT AND IS GROUNDS FOR ENFORCEMENT ACTION; FOR PERMIT TERMINATION, REVOCATION, RE-ISSUANCE, OR MODIFICATION; OR FOR DENIAL OF A PERMIT OR PERMIT RENEWAL.

B. THE PERMITTEE AND CO-PERMITTEE MAY BE SUBJECT TO CRIMINAL AND/OR CIVIL PENALTIES FOR VIOLATIONS OF THE TERMS AND CONDITIONS OF THE NPDES PERMIT UNDER SECTIONS 602 AND 605 OF THE CLEAN STREAMS LAW, 35 P.S. SECTIONS 691.602 AND 691.605, AND UNDER THE CLEAN WATER ACT AS SPECIFIED IN 40 CFR SECTIONS 122.41(A) (2) AND (3), WHICH ARE INCORPORATED BY REFERENCE.

C. SECTION 309(C)(4) OF THE CLEAN WATER ACT PROVIDES THAT ANY PERSON WHO KNOWINGLY MAKES ANY FALSE MATERIAL STATEMENT, REPRESENTATION, OR CERTIFICATION IN ANY RECORD OR OTHER DOCUMENT SUBMITTED OR REQUIRED TO BE MAINTAINED UNDER THIS PERMIT, INCLUDING REPORTS OF COMPLIANCE OR NONCOMPLIANCE SHALL, UPON CONVICTION, BE PUNISHED BY A FINE OF NOT MORE THAN $10,000 OR BY IMPRISONMENT FOR NOT MORE THAN 2 YEARS OR BY BOTH. IN ADDITION, CRIMINAL SANCTIONS ARE SET FORTH FOR FALSE SWEARING AND UN-SWORN FALSIFICATION AT 18 PA. C.S. §§4903-4904.

7. WITHIN 30 DAYS AFTER THE COMPLETION OF EARTH DISTURBANCE ACTIVITIES AUTHORIZED BY THIS PERMIT, INCLUDING THE PERMANENT STABILIZATION AND PROPER INSTALLATION OF PCSM BMPS IN ACCORDANCE WITH THE APPROVED PCSM PLAN, OR UPON SUBMISSION OF THE NOT IF SOONER, THE PERMITTEE SHALL FILE WITH THE DEPARTMENT OR AUTHORIZED CONSERVATION DISTRICT A CERTIFIED STATEMENT SIGNED BY A LICENSED PROFESSIONAL AND BY THE PERMITTEE THAT WORK HAS BEEN PERFORMED IN ACCORDANCE WITH THE TERMS AND CONDITIONS OF THIS PERMIT AND THE APPROVED E&S AND PCSM PLANS.

8. NOTICE OF TERMINATION (NOT): UPON PERMANENT STABILIZATION OF EARTH DISTURBANCE ACTIVITIES ASSOCIATED WITH CONSTRUCTION ACTIVITY THAT ARE AUTHORIZED BY THIS PERMIT AND BMPS IDENTIFIED IN THE PCSM PLAN HAVE BEEN PROPERLY INSTALLED, THE PERMITTEE OR CO-PERMITTEE OF THE FACILITY MUST SUBMIT A NOT FORM THAT IS SIGNED IN ACCORDANCE WITH PART B, SECTION 1.C, SIGNATORY REQUIREMENTS, OF THIS PERMIT. ALL LETTERS CERTIFYING DISCHARGE TERMINATION ARE TO BE SENT TO THE DEPARTMENT OR AUTHORIZED CONSERVATION DISTRICT. THE NOT MUST CONTAIN THE FOLLOWING INFORMATION: FACILITY NAME, ADDRESS, AND LOCATION, OPERATOR NAME AND ADDRESS, PERMIT NUMBER, IDENTIFICATION AND PROOF OF ACKNOWLEDGMENT FROM THE PERSON(S) WHO WILL BE RESPONSIBLE FOR OPERATION AND MAINTENANCE OF THE PCSM BMPS IN ACCORDANCE WITH THE APPROVED PCSM PLAN, AND THE REASON FOR PERMIT TERMINATION. UNTIL THE PERMITTEE HAS RECEIVED WRITTEN ACKNOWLEDGEMENT OF THE NOT, THE PERMITTEE WILL REMAIN RESPONSIBLE FOR OPERATING AND MAINTAINING ALL E&S BMPS AND PCSM BMPS ON THE PROJECT SITE AND WILL BE RESPONSIBLE FOR VIOLATIONS OCCURRING ON THE PROJECT SITE.

9. UPON REDUCTION, LOSS, OR FAILURE OF THE BMPS, THE PERMITTEE AND CO-PERMITTEE SHALL TAKE IMMEDIATE ACTION TO RESTORE THE BMPS OR PROVIDE AN ALTERNATIVE METHOD OF TREATMENT. SUCH RESTORED BMPS OR ALTERNATIVE TREATMENT SHALL BE AT LEAST AS EFFECTIVE AS THE ORIGINAL BMPS.

10. SOLIDS, SEDIMENTS, AND OTHER POLLUTANTS REMOVED IN THE COURSE OF TREATMENT OR CONTROL OF STORM WATER SHALL BE DISPOSED IN ACCORDANCE WITH FEDERAL AND STATE LAW AND REGULATIONS IN ORDER TO PREVENT ANY POLLUTANT IN SUCH MATERIALS FROM ADVERSELY AFFECTING THE ENVIRONMENT.

11. ALL SEDIMENT REMOVED FROM BMP'S SHALL BE DISPOSED OF IN LANDSCAPE AREAS OUTSIDE OF STEEP SLOPES, WETLANDS, FLOODPLAINS OR DRAINAGE SWALE, AND IMMEDIATELY STABILIZED OR PLACED IN TOPSOIL STOCKPILE.

TRANSFER OF OWNERSHIP OR CONTROL

1. THE NPDES PERMIT IS NOT TRANSFERABLE TO ANY PERSON EXCEPT AFTER NOTICE AND ACKNOWLEDGMENT BY THE DEPARTMENT OR AUTHORIZED CONSERVATION DISTRICT.

A. IN THE EVENT OF ANY PENDING CHANGE IN CONTROL OR OWNERSHIP OF FACILITIES FROM WHICH THE AUTHORIZED DISCHARGES EMANATE, THE PERMITTEE OR CO-PERMITTEE SHALL NOTIFY THE DEPARTMENT OR AUTHORIZED CONSERVATION DISTRICT USING THE FORM ENTITLED "RANSFEREE/CO-PERMITTEE APPLICATION" OF SUCH PENDING CHANGE AT LEAST 30 DAYS PRIOR TO THE CHANGE IN OWNERSHIP OR CONTROL.

B. THE TRANSFEREE/CO-PERMITTEE APPLICATION FORM SHALL BE ACCOMPANIED BY A WRITTEN AGREEMENT BETWEEN THE EXISTING PERMITTEE AND THE NEW OWNER OR OPERATOR STATING THAT THE EXISTING PERMITTEE SHALL BE LIABLE FOR VIOLATIONS OF THE PERMIT UP TO AND UNTIL THE DATE OF COVERAGE TRANSFER AND THAT THE NEW OWNER OR OPERATOR SHALL BE JOINTLY AND INDIVIDUALLY LIABLE FOR PERMIT VIOLATIONS UNDER THE PERMIT FROM THAT DATE ON.

C. AFTER RECEIPT OF THE REQUIRED DOCUMENTATION, THE DEPARTMENT OR AUTHORIZED CONSERVATION DISTRICT SHALL NOTIFY THE EXISTING PERMITTEE AND THE NEW OWNER OR OPERATOR OF ITS DECISION CONCERNING APPROVAL OF THE TRANSFER. SUCH REQUESTS SHALL BE DEEMED APPROVED UNLESS THE DEPARTMENT OR AUTHORIZED CONSERVATION DISTRICT NOTIFIES THE APPLICANT OTHERWISE WITHIN 30 DAYS.

2. THE DEPARTMENT OR AUTHORIZED CONSERVATION DISTRICT MAY REQUIRE THE NEW OWNER OR OPERATOR TO APPLY FOR AND OBTAIN AN INDIVIDUAL NPDES PERMIT.

3. FOR PURPOSES OF THIS PERMIT, OPERATORS SHALL INCLUDE GENERAL CONTRACTORS. IF, PRIOR TO CONSTRUCTION ACTIVITIES, THE OWNER IS THE PERMITTEE AND AN OPERATOR/GENERAL CONTRACTOR IS LATER IDENTIFIED TO BECOME A CO-PERMITTEE, THE OWNER SHALL:

A. NOTIFY THE DEPARTMENT OR AUTHORIZED CONSERVATION DISTRICT BY SUBMITTING AN ADMINISTRATIVELY COMPLETE AND ACCEPTABLE TRANSFEREE/CO-PERMITTEE APPLICATION FORM.

B. ENSURE THAT MONITORING REPORTS AND ANY OTHER INFORMATION REQUESTED UNDER THIS PERMIT SHALL REFLECT ALL CHANGES TO THE PERMITTEE AND THE CO-PERMITTEE NAME.

C. PROVIDE A COPY OF THE PERMIT AND APPROVED PLANS TO THE NEW CO-PERMITTEE. AFTER RECEIPT OF THE DOCUMENTATION DESCRIBED IN (3) ABOVE, THE PERMIT WILL BE CONSIDERED MODIFIED BY THE DEPARTMENT OR AUTHORIZED CONSERVATION DISTRICT. FOR THE PURPOSES OF THIS PERMIT, THIS MODIFICATION IS CONSIDERED TO BE A MINOR PERMIT MODIFICATION.

BMP 6.6.3 DRY EXTENDED DETENTION BASIN –

CONSTRUCTION SEQUENCE

1. INSTALL ALL TEMPORARY EROSION AND SEDIMENTATION CONTROLS.

a. THE AREA IMMEDIATELY ADJACENT TO THE BASIN MUST BE STABILIZED IN ACCORDANCE WITH THE PADEP's EROSION AND SEDIMENT POLLUTION CONTROL [PROGRAM MANUAL (2000 OR LATEST EDITION) PRIOR TO BASIN CONSTRUCTION.

2. PREPARE SITE FOR EXCAVATION AND/OR EMBANKMENT CONSTRUCTION.

a. ALL EXISTING VEGETATION SHOULD REMAIN IF FEASIBLE AND SHOULD ONLY BE REMOVED IF NECESSARY FOR CONSTRUCTION.

b. CARE SHOULD BE TAKEN TO PREVENT COMPACTION OF THE BASIN BOTTOM.

c. IF EXCAVATION IS REQUIRED, CLEAR THE AREA TO BE EXCAVATED OF ALL VEGETATION. REMOVE ALL TREE ROOTS, ROCKS AND BOULDERS ONLY IN EXCAVATION AREA.

3. EXCAVATE BOTTOM OF BASIN TO DESIRE ELEVATION (IF NECESSARY).

4. INSTALL SURROUNDING EMBANKMENTS AND INLETS AND OUTLET CONTROL STRUCTURES.

5. GRADE SUBSOIL IN BOTTOM OF BASIN, TAKING CARE TO PREVENT COMPACTION. COMPACT SURROUNDING EMBANKMENT AREAS AND AROUND INLET AND OUTLET STRUCTURES.

6. APPLY AND GRADE PLANTING SOIL.

7. APPLY GEO-TEXTILES AND OTHER EROSION-CONTROL MEASURES.

8. SEED, PLANT AND MULCH ACCORDING TO PLANTING PLAN.

9. INSTALL ANY ANTI-GRAZING MEASURES, IF NECESSARY.

MAINTENANCE

MAINTENANCE IS NECESSARY TO ENSURE PROPER FUNCTIONALLY OF THE EXTENDED DETENTION BASIN AND SHOULD TAKE PLACE ON A QUARTERLY BASIS. A BASIN MAINTENANCE PLAN SHOULD BE DEVELOPED WHICH INCLUDES THE FOLLOWING MEASURES:

- ALL BASIN STRUCTURE EXPECTED TO RECEIVE AND/OR TRAP DEBRIS AND SEDIMENT SHOULD BE INSPECTED FOR CLOGGING AND EXCESSIVE DEBRIS AND SEDIMENT ACCUMULATION AT LEAST FOUR TIMES PER YEAR, AS WELL AS AFTER EVERY STORM GREATER THAN 1 INCH.
  - STRUCTURES INCLUDE BASIN BOTTOMS, TRASH RACKS, OUTLETS STRUCTURES, RIPRAP OR GABION STRUCTURES, AND INLETS
- SEDIMENT REMOVAL SHOULD BE CONDUCTED WHEN THE BASIN IS COMPLETELY DRY. SEDIMENT SHOULD BE DISPOSED OF PROPERLY AND ONCE SEDIMENT IS REMOVED, DISTURBED AREAS NEED TO BE IMMEDIATELY STABILIZED AND REVEGETATED.
- MOWING AND/OR TRIMMING OF VEGETATION SHOULD BE PERFORMED AS NECESSARY TO SUSTAIN THE SYSTEM, BUT ALL DETRITUS SHOULD BE REMOVED FROM THE BASIN.
  - VEGETATED AREAS SHOULD BE INSPECTED ANNUALLY FOR EROSION.
  - VEGETATED AREAS SHOULD BE INSPECTED ANNUALLY FOR UNWANTED GROWTH OF EXOTIC/INVASIVE SPECIES.
- VEGETATIVE COVER SHOULD BE MAINTAINED AT A MINIMUM OF 95 PERCENT. IF VEGETATIVE COVER HAS BEEN REDUCED BY 10%, VEGETATION SHOULD BE REESTABLISHED.

BMP 6.7.3 – SOIL AMENDMENT AND RESTORATION –

1. TREATING COMPACTION BY SOIL RESTORATION

A. SOIL AMENDMENT MEDIA USUALLY CONSISTS OF COMPOST, BUT CAN INCLUDE MULCH, MANURES, SAND, AND MANUFACTURED MICROBIAL SOLUTIONS.

B. COMPOST SHOULD BE ADDED AT A RATE OF 2:1 (SOIL:COMPOST). IF A PROPRIETARY PRODUCT IS USED, THE MANUFACTURER'S INSTRUCTIONS SHOULD BE FOLLOWED IN TERMS OF MIXING AND APPLICATION RATE.

C. SOIL RESTORATION SHOULD NOT BE USED ON SLOPES GREATER THAN 30%. IN THESE AREAS, DEEP-ROOTED VEGETATION CAN BE USED TO INCREASE STABILITY.

D. SOIL RESTORATION SHOULD NOT TAKE PLACE WITHIN THE DRIP LINE OF A TREE TO AVOID DAMAGING THE ROOT SYSTEM.

E. ON-SITE SOILS WITH AN ORGANIC CONTENT OF AT LEAST 5 PERCENT CAN BE PROPERLY STOCKPILED (TO MAINTAIN ORGANIC CONTENT) AND REUSED.

F. PROCEDURE: ROTOTILL, OR RIP THE SUBGRADE, REMOVE ROCKS, DISTRIBUTE THE COMPOST, SPREAD THE NUTRIENTS, ROTOTILL AGAIN.

G. ADD 6 INCHES COMPOST/AMENDMENT AND TILL UP TO 8 INCHES FOR MINOR COMPACTION.

H. ADD 10 INCHES COMPOST/AMENDMENT AND TILL UP TO 20 INCHES FOR MAJOR COMPACTION.

2. TREATING COMPACTION BY RIPPING/SUBSOILING/TILLING/SCARIFICATION

A. SUBSOILING IS ONLY EFFECTIVE WHEN PERFORMED ON DRY SOILS.

B. RIPPING, SUBSOILING, OR SCARIFICATION OF THE SUBSOIL SHOULD BE PERFORMED WHERE SUBSOIL HAS BECOME COMPACTED BY EQUIPMENT OPERATION, DRIED OUT AND CRUSTED, OR WHERE NECESSARY TO OBLITERATE EROSION RILLS.

C. RIPPING (SUBSOILING) SHOULD BE PERFORMED USING A SOLID-SHANK RIPPER AND TO A DEPTH OF 20 INCHES (8 INCHES FOR MINOR COMPACTION).

D) SHOULD BE PERFORMED BEFORE COMPOST IS PLACED AND AFTER ANY EXCAVATION IS COMPLETED.

E) SUBSOILING SHOULD NOT BE PERFORMED WITHIN THE DRIP LINE OF ANY EXISTING TREES, OVER UNDERGROUND UTILITY INSTALLATIONS WITHIN 30 INCHES OF THE SURFACE, WHERE TRENCHING/DRAINAGE LINES ARE INSTALLED, WHERE COMPACTION IS BY DESIGN.

SPECIFICATIONS

1. SCOPE

A. THIS SPECIFICATION COVERS THE USE OF COMPOST FOR SOIL AMENDMENT AND THE MECHANICAL RESTORATION OF COMPACTED, ERODED AND NON-VEGETATED SOILS. SOIL AMENDMENT AND RESTORATION IS NECESSARY WHERE EXISTING SOIL HAS BEEN DEEMED UNHEALTHY IN ORDER TO RESTORE SOIL STRUCTURE AND FUNCTION, INCREASE INFILTRATION POTENTIAL AND SUPPORT HEALTHY VEGETATIVE COMMUNITIES.

B. SOIL AMENDMENT PREVENTS AND CONTROLS EROSION BY ENHANCING THE SOIL SURFACE TO PREVENT THE INITIAL DETACHMENT AND TRANSPORT OF SOIL PARTICLES.

2. COMPOST MATERIALS

A. COMPOST PRODUCTS SPECIFIED FOR USE IN THIS APPLICATION ARE DESCRIBED IN TABLE 1. THE PRODUCT'S PARAMETERS WILL VARY BASED ON WHETHER VEGETATION WILL BE ESTABLISHED ON THE TREATED SLOPE.

B. ONLY COMPOST PRODUCTS THAT MEET ALL APPLICABLE STATE AND FEDERAL REGULATIONS PERTAINING TO ITS PRODUCTION AND DISTRIBUTION MAY BE USED IN THIS APPLICATION. APPROVED COMPOST PRODUCTS MUST MEET RELATED STATE AND FEDERAL CHEMICAL CONTAMINANT (E.G. HEAVY METALS, PESTICIDES, ETC.) AND PATHOGEN LIMIT STANDARDS PERTAINING TO THE FEEDSTOCKS (SOURCE MATERIALS) IN WHICH IT IS DERIVED.

C. VERY COARSE COMPOST SHOULD BE AVOIDED FOR SOIL AMENDMENT AS IT WILL MAKE PLANTING AND CROP ESTABLISHMENT MORE DIFFICULT.

D. NOTE 1 – SPECIFYING THE USE OF COMPOST PRODUCTS THAT ARE CERTIFIED BY THE U.S. COMPOSTING COUNCIL'S SEAL OF TESTING (STA) PROGRAM (WWW.COMPOSTINGCOUNCIL.ORG) WILL ALLOW FOR THE ACQUISITION OF PRODUCTS THAT ARE ANALYZED ON A ROUTINE BASIS, USING THE SPECIFIED TEST METHODS. STA PARTICIPANTS ARE ALSO REQUIRED TO PROVIDE A STANDARD PRODUCT LABEL TO ALL CUSTOMERS, ALLOWING EASY COMPARISON TO OTHER PRODUCTS.

3. SUB-SOILING TO RELIEVE COMPACTION

A. BEFORE THE TIME THE COMPOST IS PLACED AND PREFERABLY WHEN EXCAVATION IS COMPLETED, THE SUBSOIL SHALL BE IN A LOOSE, FRIABLE CONDITION TO A DEPTH OF 20 INCHES BELOW FINAL TOPSOIL GRADE, AND THERE SHALL BE NO EROSION RILLS OR WASHOUTS IN THE SUBSOIL SURFACE EXCEEDING 3 INCHES IN DEPTH.

B. TO ACHIEVE THIS CONDITION, SUBSOILING, RIPPING OR SCARIFICATION OF THE SUBSOIL WILL BE REQUIRED AS DIRECTED BY THE OWNER'S REPRESENTATIVE, WHEREVER THE SUBSOIL HAS BEEN COMPACTED BY EQUIPMENT OPERATION OR HAS BECOME DRIED OUT AND CRUSTED, AND WHERE NECESSARY TO OBLITERATE EROSION RILLS. SUB-SOILING SHALL BE REQUIRED TO REDUCE SOIL COMPACTION IN ALL AREAS WHERE PLANT ESTABLISHMENT IS PLANNED. SUB-SOILING SHALL BE PERFORMED BY THE PRIME OR EXCAVATING CONTRACTOR AND SHALL OCCUR BEFORE COMPOST PLACEMENT.

C. SUBSOILED AREAS SHALL BE LOOSENED TO LESS THAN 1400 KPA (200 PSI) TO A DEPTH OF 20 INCHES BELOW FINAL TOPSOIL GRADE. WHEN DIRECTED BY THE OWNER'S REPRESENTATIVE, THE CONTRACTOR SHALL VERIFY THAT THE SUB-SOILING WORK CONFORMS TO THE SPECIFIED DEPTH.

D. SUB-SOILING SHALL FORM A TWO-DIRECTIONAL GRID. CHANNELS SHALL BE CREATED BY A COMMERCIALLY AVAILABLE, MULTI-SHANKED, PARALLELOGRAM IMPLEMENT (SOLID-SHANK RIPPER). THE EQUIPMENT SHALL BE CAPABLE OF EXERTING A PENETRATION FORCE NECESSARY FOR THE SITE. NO DISC CULTIVATORS CHISEL PLOWS, OR SPRING-LOADED EQUIPMENT WILL BE ALLOWED. THE GRID CHANNELS SHALL BE SPACED A MINIMUM OF 12 INCHES TO A MAXIMUM OF 36 INCHES APART, DEPENDING ON EQUIPMENT, SITE CONDITIONS, AND THE SOIL MANAGEMENT PLAN. THE CHANNEL DEPTH SHALL BE A MINIMUM OF 20 INCHES OR AS SPECIFIED IN THE SOIL MANAGEMENT PLAN. IF SOILS ARE SATURATED, THE CONTRACTOR SHALL DELAY OPERATIONS UNTIL THE SOIL WILL NOT HOLD A BALL WHEN SQUEEZED. ONLY ONE PASS SHALL BE PERFORMED ON ERODIBLE SLOPES GREATER THAN 1 VERTICAL TO 3 HORIZONTAL. WHEN ONLY ONE PASS IS USED, WORK SHOULD BE AT RIGHT ANGLES TO THE DIRECTION OF SURFACE DRAINAGE, WHENEVER PRACTICAL.

E. EXCEPTIONS TO SUB-SOILING INCLUDE AREAS WITHIN THE DRIP LINE OF ANY EXISTING TREES, OVER UTILITY INSTALLATIONS WITHIN 30 INCHES OF THE SURFACE, WHERE TRENCHING/DRAINAGE LINES ARE INSTALLED, WHERE COMPACTION IS BY DESIGN (ABUTMENTS, FOOTINGS, OR IN SLOPES), AND ON INACCESSIBLE SLOPES, AS APPROVED BY THE OWNER'S REPRESENTATIVE. IN CASES WHERE EXCEPTIONS OCCUR, THE CONTRACTOR SHALL OBSERVE A MINIMUM SETBACK OF 20 FEET OR AS DIRECTED BY THE OWNER'S REPRESENTATIVE. ARCHAEOLOGICAL CLEARANCES MAY BE REQUIRED IN SOME INSTANCES.

4. CONSTRUCTION SEQUENCE:

A. SPREAD 2 – 3 INCHES OF APPROVED COMPOST ON EXISTING SOIL. TILL ADDED SOIL INTO EXISTING SOIL WITH A ROTARY TILLER THAT IS SET TO A DEPTH OF 6 INCHES. ADD AN ADDITIONAL 4 INCHES OF APPROVED COMPOST TO BRING THE AREA UP TO GRADE.

B. AFTER PERMANENT PLANTING/SEEDING, 2 – 3 INCHES OF COMPOST BLANKET WILL BE APPLIED TO ALL AREAS NOT PROTECTED BY GRASS OR OTHER PLANTS.

BMP 6.4.5: RAIN GARDEN

MAINTENANCE

1. WHILE VEGETATION IS BEING ESTABLISHED, PRUNING AND WEEDING MAY BE REQUIRED TO ESTABLISH PROPER GROWTH.

2. DETRITUS MAY ALSO NEED TO BE REMOVED EVERY YEAR. PERENNIAL PLANTINGS MAY BE CUT DOWN AT THE END OF THE GROWING SEASON.

3. MULCH SHOULD BE RESPREAD WHEN EROSION IS EVIDENT AND BE REPLENISHED AS NEEDED. ONCE EVERY 2 TO 3 YEARS, THE ENTIRE AREA MAY REQUIRE MULCH REPLACEMENT.

4. RAIN GARDEN SHOULD BE INSPECTED AT LEAST TWO TIMES PER YEAR FOR SEDIMENT BUILD-UP, EROSION, VEGETATIVE CONDITIONS, ETC.

5. DURING PERIODS OF EXTENDED DROUGHT, RAIN GARDEN MAY REQUIRE WATERING.

6. TREES AND SHRUBS SHOULD BE INSPECTED TWICE PER YEAR TO EVALUATE HEALTH.

CONSTRUCTION SEQUENCE

1. INSTALL TEMPORARY SEDIMENT CONTROL BMPS AS SHOWN ON THE PLANS.

2. COMPLETE SITE GRADING.

3. EXCAVATE RAIN GARDEN TO PROPOSED INVERT DEPTH AND SCARIFY THE EXISTING SOIL SURFACES. DO NOT COMPACT IN-SITU SOILS. EXISTING SUBGRADE IN RAIN GARDEN AREAS SHALL NOT BE COMPACTED OR SUBJECT TO EXCESSIVE CONSTRUCTION EQUIPMENT TRAFFIC. INITIAL EXCAVATION CAN BE PERFORMED DURING ROUGH SITE GRADING BUT SHALL NOT BE CARRIED TO WITHIN ONE FOOT OF THE FINAL BOTTOM ELEVATION. FINAL EXCAVATION SHOULD NOT TAKE PLACE UNTIL ALL DISTURBED AREAS IN THE DRAINAGE AREA HAVE BEEN STABILIZED.

4. WHERE EROSION OF SUBGRADE HAS CAUSED ACCUMULATION OF FINE MATERIALS AND/OR SURFACE PONDING IN THE GRADED BOTTOM, THIS MATERIAL SHALL BE REMOVED WITH LIGHT EQUIPMENT AND UNDERLYING SOILS SCARIFIED TO A DEPTH OF 6" WITH A YORK RAKE OR EQUIVALENT BY LIGHT TRACTOR.

5. BACKFILL RAIN GARDEN WITH AMENDED SOIL AS SHOWN ON PLANS AND SPECIFICATIONS. OVERFILLING IS RECOMMENDED TO ACCOUNT FOR SETTLEMENT. LIGHT HAND TAMPING IS ACCEPTABLE IF NECESSARY.

6. PRESOAK THE PLANTING SOIL PRIOR TO PLANTING VEGETATION TO AID IN SETTLEMENT.

7. COMPLETE FINAL GRADING TO ACHIEVE PROPOSED DESIGN ELEVATIONS, LEAVING SPACE FOR UPPER LAYER OF COMPOST, MULCH OR TOPSOIL AS SPECIFIED ON PLANS.

8. PLANT VEGETATION ACCORDING TO PLANTING PLAN.

9. MULCH AND INSTALL EROSION PROTECTION AT SURFACE FLOW ENTRANCES WHERE NECESSARY.

SOIL SYMBOL	SOIL NAME	SLOPE (%)	DEPTH TO BEDROCK	DEPTH TO SEASONAL HIGH WATER TABLE	DRAINAGE CLASS RATING	LAND CAPABILITY	HYDROLOGIC SOIL GROUP	HYDRIC SOIL
UgD	URBAN LAND	8 TO 25	–	–	–	8s	C	NONHYDRIC

SOURCE: UNITED STATES DEPARTMENT OF AGRICULTURE, NATURAL RESOURCES CONSERVATION SERVICE "WEB SOIL SURVEY"

SOIL TYPES AND LIMITATIONS

SOILS TAKEN FROM THE SOIL SURVEY OF MONTGOMERY COUNTY, PENNSYLVANIA

MAP SYMBOL & SOIL NAME	STREETS/ROAD	LAWNS & LANDSCAPING	PONDS	
			RESERVOIR AREAS	EMBANKMENTS
UgD URBAN LAND				

RESOLUTION TO SOIL LIMITATIONS

FOR SOILS TO BE DISTURBED

MAP SYMBOL & SOIL NAME	STREETS/ROAD	LAWNS & LANDSCAPING	PONDS	
			RESERVOIR AREAS	EMBANKMENTS
UgD URBAN LAND	PUMP PONDED WATER TO SEDIMENT BASIN OR THROUGH A DIRT BAG	NO LIMITATIONS	NO LIMITATIONS	USE FOR CORE OF EMBANKMENT

SEAL:

COMMONWEALTH OF PENNSYLVANIA
REGISTERED PROFESSIONAL
PETER C. ANDERSEN
ENGINEER
PE025269-E

ANDERSEN ENGINEERING ASSOCIATES INCORPORATED
306 NORTH FIFTH STREET, PERKASIE, PA
(215) 257-5711

FIELD BK/PG	AEA JOB NO.:	AEA FILE NO.:
-/-	5365	5365SITE

© 2004 THE GLAXOSMITHKLINE GROUP OF COMPANIES. ALL RIGHTS RESERVED. THIS DRAWING IS CONFIDENTIAL AND MAY NOT BE DISCLOSED, COPIED, ADAPTED OR REPRODUCED IN ANY FORM WHATSOEVER WITHOUT THE PRIOR WRITTEN CONSENT OF GLAXOSMITHKLINE.

NOTES | REFERENCE DRAWINGS | LEGEND

PAGE No.	DRAWING No.	TITLE

REVISION	DATE REVISED	CONTROL NUMBER

KEY PLAN

do more feel better live longer

UPPER MERION R&D FACILITIES
CAPITAL PROJECTS, ENGINEERING AND DESIGN
709 SWEDELAND ROAD
KING-OF-PRUSSIA, PA 19406
(610) 270-5261

SITE: UPPER MERION
BUILDING: CENTRAL UTILITIES PLANT
FLOOR:

Note: Previous Drawing Reference can be used for old drawing numbers or any previous reference that needs to be retained.

TITLE: PROPOSED CENTRAL UTILITIES PLANT (CUP) BUILDING

SHEET TITLE: POST CONSTRUCTION STORMWATER MANAGEMENT NOTES

DRN BY:	DRN BY DATE:	FILE REFERENCE:
T.L.C.	10/27/16	5365SITE
CHKD BY: P.C.A.	CHKD BY DATE:	DRAWING STATUS:

PROJECT REF.:
ORIGINAL CONTRACTOR DRAWING NO:(SEE NOTE ABOVE)
SCALE @ E1: NOT TO SCALE
LEGACY GSK DRAWING DWG NO:(SEE NOTE ABOVE)
SHEET NO: 19 OF 21
GSK DRAWING NO.: 00-00-019
REV.:

C:\Projects\5365\5365SITE.dwg, PCSM NOTES, 12/6/2016 11:47:53 AM, Spare

E&S CONSTRUCTION SEQUENCE

NOTE: ALL EARTH DISTURBANCE ACTIVITIES SHALL PROCEED IN ACCORDANCE WITH THE FOLLOWING SEQUENCE. EACH STAGE SHALL BE COMPLETED BEFORE ANY FOLLOWING STAGE IS INITIATED. CLEARING AND GRUBBING SHALL BE LIMITED ONLY THOSE AREAS DESCRIBED IN EACH STAGE. A PROFESSIONAL OR DESIGNEE WILL BE PRESENT ON SITE DURING INSTALLATION OF STORMWATER BMPS THAT ARE LISTED AS CRITICAL STAGES.

1. DELINEATE THE LIMIT OF DISTURBANCE WITH CONSTRUCTION FENCE. (TOTAL 1 DAY)
2. INSTALL EROSION AND SEDIMENT CONTROL BMPS IN THE FOLLOWING ORDER:
   1. CONSTRUCTION ENTRANCE
   2. COMPOST FILTER SOCK (TOTAL 2 DAYS)
3. CONSTRUCT SEDIMENTATION TRAP. (4 DAYS) – CRITICAL STAGE
4. DEMOLISH EXISTING STRUCTURES AS NECESSARY.
5. CLEAR AND GRUB AREA TO BE GRADED FOR PROPOSED IMPROVEMENTS (2 DAYS).
6. ROUGH GRADE AREA FOR PROPOSED IMPROVEMENTS.
7. TEMPORARILY STABILIZE DISTURBED AREA.
8. INSTALL STORM SEWER, SANITARY SEWER (10 DAYS) – CRITICAL STAGE
9. CONSTRUCT PROPOSED PARKING AND BUILDING. STABILIZE DISTURBED AREAS OF EACH AS THEY ARE COMPLETED (180 DAYS)
10. CONVERT SEDIMENTATION TRAP TO RAIN GARDEN/DETENTION BASIN (5 DAYS)
11. INSTALL OUTLET STRUCTURE, UNDER DRAIN AND OUTLET PIPE. (5 DAYS)
12. FINE GRADE. (2 DAYS)
13. PERMANENTLY STABILIZE DISTURBED AREAS. (2 DAYS)
14. ONCE PERMANENT STABILIZATION HAS BEEN ACHIEVED, REMOVE ALL EROSION AND SEDIMENT CONTROL BMP'S AND RE-STABILIZE AFFECTED AREAS.

CRITICAL STAGE TO BE INSPECTED:

1. CONSTRUCT INFILTRATION BASIN/DETENTION BASIN WITH OUTLET PIPE, OUTLET STRUCTURE, RIP RAP APRON.
2. INSTALL ALL REMAINING STORM SEWER INCLUDING.
3. PREPARATION AND INSTALLATION OF THE PERVIOUS PAVING AND SUBBASE, EXCAVATE POROUS PAVEMENT AREA AS SHOWN ON THE PLANS. PLACE NON-WOVEN GEOTEXTILE, STONE INFILTRATION BED, 8" PAVEMENT UNDER DRAINS AND CURB TRENCH DRAINS.
4. COMPLETE INFILTRATION BASIN/DETENTION BASIN GRADING, FERTILIZE SEED AND MULCH.
5. REPLACE TOPSOIL AND SOIL AMENDMENTS WITHIN INFILTRATION BASIN/DETENTION BASIN.

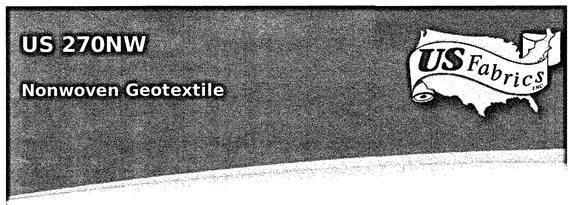

NTPEP APPROVED - GTX-2013-01-031. US 270NW is a 10 OZ MARV WEIGHT nonwoven needlepunched geotextile made of 100% polypropylene staple filaments. US 270NW is resistant to ultraviolet deterioration, rotting, biological degradation, naturally encountered bases and acids. Polypropylene is stable within a pH range of 2 to 13. US 270NW meets the following M.A.R.V. values:

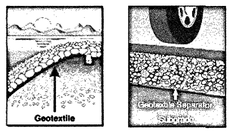

PROPERTY	TEST METHOD	ENGLISH	METRIC
Weight	ASTM D-5261	10 oz/sy	339 g/sm
Tensile Strength	ASTM D-4632	270 lbs	1,200 N
Elongation	ASTM D-4632	50%	50%
Thickness	ASTM D-5199	110 mils (at time of manufacture)	2.79 mm (at time of manufacture)
Mullen Burst*	ASTM D-3786*	525 psi	3,617 kPa
Puncture Strength*	ASTM D-4833*	165 lbs	734 N
CBR Puncture	ASTM D-6241	725 lbs	3,220 N
Trapezoidal Tear	ASTM D-4533	100 lbs	440 N
Apparent Opening Size	ASTM D-4751	100 US Sieve	0.150 mm
Permittivity	ASTM D-4491	0.94 Sec-1	0.94 Sec-1
Permeability	ASTM D-4491	0.3 cm/sec	0.3 cm/sec
Water Flow Rate	ASTM D-4491	75 g/min/sf	3,055 l/min/sm
UV Resistance @ 500 Hours	ASTM D-4355	70%	70%

ROLL SIZE	ROLL DIAMETER	AREA	WEIGHT
15' x 300'	18.0 in	500 sys	350 lbs

* Historical averages (current values not available): Mullen Burst Strength ASTM D3786 is no longer recognized by ASTM D-35 on Geosynthetics as an acceptable test method. Puncture Strength ASTM D4833 is not recognized by AASHTO M288 and has been replaced with CBR Puncture ASTM D6241.

This information is provided for reference only and is not intended as a warranty or guarantee. US Fabrics assumes no liability in connection with the use of

US Fabrics, Inc. | 3904 Virginia Avenue | Cincinnati, OH 45227 (USA) | Phone: 800-518-2290 | Fax: (513) 271-4420

E&S BMP's INSPECTION, REPORTING, AND MONITORING:

A. EXCEPT FOR DATA DETERMINED TO BE CONFIDENTIAL UNDER SECTION 607 OF THE CLEAN STREAMS LAW (35 P.S. §691.607), ALL REPORTS PREPARED IN ACCORDANCE WITH THE TERMS OF THIS PERMIT SHALL BE AVAILABLE FOR PUBLIC INSPECTION AT THE OFFICES OF THE DEPARTMENT OR AUTHORIZED CONSERVATION DISTRICT. AS REQUIRED BY THE CLEAN WATER ACT, THE CLEAN STREAMS LAWS, AND 25 PA. CODE, AND THE DEPARTMENT'S REGULATIONS, PERMIT APPLICATIONS, PERMITS, AND OTHER DOCUMENTS RELATED TO THIS PERMIT SHALL NOT BE CONSIDERED CONFIDENTIAL.

B. THE PERMITTEE AND CO-PERMITTEE(S) SHALL RETAIN RECORDS OF ALL MONITORING INFORMATION INCLUDING COPIES OF ALL MONITORING AND INSPECTION REPORTS REQUIRED BY THIS PERMIT, AND RECORDS OF DATA USED TO COMPLETE THE NOTICE OF INTENT FOR THIS PERMIT, FOR A PERIOD OF THREE YEARS FROM THE DATE OF THE TERMINATION OF COVERAGE UNDER THE PERMIT.

C. THE PERMITTEE AND CO-PERMITTEE(S) MUST ENSURE THAT VISUAL SITE INSPECTIONS ARE CONDUCTED WEEKLY, AND WITHIN 24 HOURS AFTER EACH STORM WATER EVENT THROUGHOUT THE DURATION OF CONSTRUCTION AND UNTIL THE RECEIPT AND ACKNOWLEDGEMENT OF THE NOT BY THE DEPARTMENT OR AUTHORIZED CONSERVATION DISTRICT. THE VISUAL SITE INSPECTIONS AND REPORTS SHALL BE COMPLETED IN A FORMAT PROVIDED BY THE DEPARTMENT, AND CONDUCTED BY QUALIFIED PERSONNEL, TRAINED AND EXPERIENCED IN EROSION AND SEDIMENT CONTROL, TO ASCERTAIN THAT E&S BMPS AND PCSM BMPS ARE PROPERLY CONSTRUCTED AND MAINTAINED TO EFFECTIVELY PREVENT POLLUTION TO THE WATERS OF THIS COMMONWEALTH. A WRITTEN REPORT OF EACH INSPECTION SHALL BE KEPT AND INCLUDE AT A MINIMUM:
   (1) A SUMMARY OF SITE CONDITIONS, E&S BMP AND PCSM BMP, IMPLEMENTATION AND MAINTENANCE AND COMPLIANCE ACTIONS; AND
   (2) THE DATE, TIME, NAME AND SIGNATURE OF THE PERSON CONDUCTING THE INSPECTION.

D. WHERE E&S OR PCSM BMPS ARE FOUND TO BE INOPERATIVE OR INEFFECTIVE DURING AN INSPECTION, OR ANY OTHER TIME, THE PERMITTEE AND CO-PERMITTEE(S) SHALL IMMEDIATELY CONTACT THE DEPARTMENT OR AUTHORIZED CONSERVATION DISTRICT, BY PHONE OR PERSONAL CONTACT, FOLLOWED BY THE SUBMISSION OF A WRITTEN REPORT WITHIN 5 DAYS OF THE INITIAL CONTACT. NONCOMPLIANCE REPORTS SHALL INCLUDE THE FOLLOWING INFORMATION:
   (1) ANY CONDITION ON THE PROJECT SITE WHICH MAY ENDANGER PUBLIC HEALTH, SAFETY, OR THE ENVIRONMENT, OR INVOLVE INCIDENTS WHICH CAUSE OR THREATEN POLLUTION;
   (2) THE PERIOD OF NONCOMPLIANCE, INCLUDING EXACT DATES AND TIMES AND/OR ANTICIPATED TIME WHEN THE ACTIVITY WILL RETURN TO COMPLIANCE;
   (3) STEPS BEING TAKEN TO REDUCE, ELIMINATE, AND PREVENT RECURRENCE OF THE NONCOMPLIANCE; AND
   (4) THE DATE OR SCHEDULE OF DATES, AND IDENTIFYING REMEDIES FOR CORRECTING NONCOMPLIANCE CONDITIONS.

RESPONSIBILITIES FOR FILL MATERIAL

THE CONTRACTOR SHALL BE RESPONSIBLE TO PERFORM ENVIRONMENTAL DUE DILIGENCE AND DETERMINE THAT ALL FILL IMPORTED TO THE SITE MEETS THE DEP DEFINITION OF CLEAN FILL.

THE RESPONSIBILITIES OF DUE DILIGENCE INVOLVES INVESTIGATIVE TECHNIQUES, INCLUDING, BUT NOT LIMITED TO, VISUAL PROPERTY INSPECTIONS, ELECTRONIC DATA BASE SEARCHES, REVIEW OF OWNERSHIP AND USE HISTORY OF PROPERTY, SANBORN MAPS, ENVIRONMENTAL QUESTIONNAIRES, TRANSACTION SCREENS, ANALYTICAL TESTING, ENVIRONMENTAL ASSESSMENTS OR AUDITS.

CLEAN FILL SHALL BE UNCONTAMINATED, NON-WATER-SOLUBLE, NON-DECOMPOSED INERT SOLID MATERIAL. CLEAN FILL INCLUDES SOIL, ROCK, STONE DREDGED MATERIAL, USED ASPHALT, AND BRICK, BLOCK OR CONCRETE FROM CONSTRUCTION AND DEMOLITION ACTIVATES THAT IS SEPARATE FROM OTHER WASTE AND RECOGNIZED AS SUCH. (25 PA CODE §§ 271.101 AND 287.101) THE TERM DOES NOT INCLUDE MATERIALS PLACED IN OR ON THE WATERS OF THE COMMONWEALTH UNLESS OTHERWISE NOTED.

THE CONTRACTOR SHALL PERFORM A PA DOT CLEAN FILL ENVIRONMENTAL DUE DILIGENCE PHASE 1 INSPECTION. FILL MATERIAL THAT DOES NOT PASS THE PHASE 1 INSPECTION SHALL NOT BE USED ON SITE.

RECEIVING WATERS CLASSIFICATION

THE RECEIVING WATERS FOR ALL DRAINAGE AREAS OF THE PROPOSED PROJECT ARE TO A TRIBUTARY TO THE DOE RUN.

THE PA DEP CHAPTER 93 CLASSIFICATION IS TSF.

NOTIFICATION REGARDING MAINTENANCE OF PUBLIC STREETS DURING CONSTRUCTION ACTIVITY

MUD SEDIMENT AND/OR DEBRIS TRACKED FROM THE SITE ONTO PUBLIC CARTWAY SHALL BE IMMEDIATELY REMOVED BY BROOMING AND/OR MECHANICAL MEANS TO THE SATISFACTION OF THE TOWNSHIP. USE OF A BACKHOE BUCKET TO SCRAP ROADWAY SURFACE IS PROHIBITED. WHERE MUD AND/OR SEDIMENT IS CAUSING SLICK AND/OR HAZARDOUS CONDITIONS, ROADWAY SURFACE SHALL BE IMMEDIATELY PRESSURE WASHED TO REMOVE CONDITION. ALL SEDIMENT LADEN WATER MUST BE FILTERED IN A MANURE SATISFACTORY TO THE BUCKS COUNTY CONSERVATION DISTRICT BEFORE ENTERING STORM SEWERS AND/OR DRAINAGE CHANNELS.

SEEDING SPECIFICATIONS:

TEMPORARY SEEDING AND MULCHING SPECIFICATIONS

A) LIME: PULVERIZED AGRICULTURAL LIMESTONE.
APPLICATION RATE: 80 LBS. PER 1000 S.F.
(DETERMINE ACTUAL NEED FOR LIME WITH SOIL TEST)

B) FERTILIZER: 10-20-20 ANALYSIS COMMERCIAL FERTILIZER
APPLICATION RATE: 192 LBS. PER 1000 S.F.

C) SEED: ANNUAL RYE GRASS
APPLICATION RATE: 3 LBS. PER 1000 S.F.

D) MULCH: STRAW OR UNROTTED SALT HAY TO BE APPLIED AFTER SEEDING
APPLICATION RATE: 3 TONS PER ACRE OR 138 LBS. PER 1000 S.F.

PERMANENT SEEDING AND MULCHING SPECIFICATIONS

A) LIME: PULVERIZED AGRICULTURAL LIMESTONE.
APPLICATION RATE: 50 LBS. PER 1000 S.F.
(DETERMINE ACTUAL NEED FOR LIME WITH SOIL TEST)

B) FERTILIZER: 10-6-4 ANALYSIS COMMERCIAL FERTILIZER
APPLICATION RATE: 35 LBS. PER 1000 S.F.

C) SEED: 60% KENTUCKY BLUEGRASS
30% CREEPING RED FESCUE
10% FINE LEAF RYE
APPLICATION RATE: 6 LBS. PER 1000 S.F.

D) MULCH: STRAW OR UNROTTED SALT HAY TO BE APPLIED AFTER SEEDING
APPLICATION RATE: 3 TONS PER ACRE OR 138 LBS. PER 1000 S.F.

NPDES GENERAL SITE NOTES

1. THIS PROJECT WAS DESIGNED TO MINIMIZE EXTENT AND DURATION OF EARTH DISTURBANCE, BY STABILIZING ANY DISTURBED AREAS AS SOON AS POSSIBLE.
2. THIS PROJECT WAS DESIGNED TO PROTECT EXISTING DRAINAGE FEATURES AND EXISTING VEGETATION BY LIMITING LAND CLEARING AND GRADING.
3. THIS PROJECT WAS DESIGNED TO MINIMIZE SOIL COMPACTION, BY LIMITING THE USE OF EQUIPMENT IN AREAS OF DISTURBANCE AND AREAS THAT ARE OUTSIDE OF THE DISTURBED AREA.
4. THIS PROJECT UTILIZES SOIL AMENDMENTS, INFILTRATION, LANDSCAPING, INFILTRATION BASIN AND DETENTION FACILITIES TO MINIMIZE CHANGES IN STORMWATER RUNOFF.
5. THERE ARE NO KNOWN GEOLOGIC OR SOIL CONDITIONS THAT MAY HAVE THE POTENTIAL TO CAUSE POLLUTION.
6. IT IS NOT ANTICIPATED THAT ANY MATERIAL THAT COULD CAUSE POLLUTION WILL BE ENCOUNTERED.
7. THERE AREN'T ANY EXISTING OR PROPOSED RIPARIAN BUFFERS OR PROPOSED INFILTRATION BMP'S LOCATED OUTSIDE OF THE LIMITS OF DISTURBANCE OR OUTSIDE OF THE PROPOSED GRADING AREAS.
8. THERE AREN'T ANY RIPARIAN FOREST BUFFERS INSIDE OR OUTSIDE OF THE LIMIT OF DISTURBANCE.
9. THERE AREN'T ANY RIPARIAN BUFFERS OFFSET.
10. NO RIPARIAN BUFFER IS PROPOSED AS PART OF THIS PROJECT.
11. NO NON-DISCHARGE AND/OR ABACT BMP'S PROPOSED.
12. THIS PLAN PRESERVES THE INTEGRITY OF STREAM CHANNELS AND MAINTAINS AND PROTECTS THE PHYSICAL, BIOLOGICAL AND CHEMICAL QUALITIES OF THE RECEIVING STREAM, BY MAINTAINING THE WATER QUALITY FROM THE AREAS OF CONSTRUCTION.
13. THIS PROJECT WAS DESIGNED TO MINIMIZE GENERATION OF INCREASED STORMWATER RUNOFF, BY LIMITING THE AMOUNT OF IMPERVIOUS SURFACE.
14. THIS PROJECT WAS DESIGNED TO MINIMIZE NEW IMPERVIOUS AREAS, BY LIMITING THE NUMBER OF PARKING SPACES TO BE MINIMUM REQUIRED BY THE BOROUGH ZONING ORDINANCE. FURTHERMORE, SOME OF THE PARKING WILL NOT BE INSTALLED UNTIL IT IS REQUIRED.
15. THIS PROJECT WAS DESIGNED TO PROTECT EXISTING DRAINAGE FEATURES BY RESTRICTING THE AMOUNT OF DISTURBANCE.
16. THIS PROJECT IS NOT IN A HQ OR EV WATERSHED.
17. NO WETLANDS WILL BE DISTURBED. THERE ARE NO WETLANDS ON THIS SITE.
18. NO PROPRIETARY BMP SYSTEMS ARE PROPOSED.
19. ALL SEDIMENT REMOVED FROM BMPS SHALL BE DISPOSED OF IN THE MANNER DESCRIBED ON THE PLANS. SEDIMENT REMOVED FROM BMPS SHALL BE DISPOSED OF IN LANDSCAPED AREAS OUTSIDE OF STEEP SLOPES, WETLANDS, FLOODPLAINS, OR DRAINAGE SWALES AND IMMEDIATELY STABILIZED, OR PLACED IN TOPSOIL STOCKPILES

RESPONSES TO SOIL LIMITATIONS:

*USE SUFFICIENT AND PROPER BEST MANAGEMENT PRACTICES TO MINIMIZE EROSION.

*DO NOT PERFORM TRENCHING, BACKFILLING OR COMPACTING WHEN WEATHER CONDITIONS OR THE CONDITION OF MATERIAL IS SUCH, IN THE OPINION OF THE ENGINEER, THAT WORK CANNOT BE PERFORMED SATISFACTORY.

*DO NOT USE BACKFILL MATERIALS CONTAINING MOISTURE IN EXCESS OF THE AMOUNT NECESSARY FOR COMPACTION.

*PLAN WORK SO AS TO PROVIDE ADEQUATE PROTECTION DURING STORMS WITH PROVISIONS AVAILABLE FOR PREVENTING FLOOD DAMAGE.

*KEEP EXCAVATIONS FREE FROM WATER DURING THE PERFORMANCE OF WORK. PROVIDE AND OPERATE PUMPS WITH SUFFICIENT CAPACITY FOR DEWATERING THE EXCAVATIONS. PONDED WATER TO BE PUMPED THROUGH A FILTER BAG.

*USE SEED SUITED FOR SITE CONDITIONS; PROVIDE SUFFICIENT TOPSOIL PREPARATION AND MULCHING.

*WORK DURING WARM WEATHER MONTHS TO ACHIEVE THESE ENDS.

SEEDING NOTES:

1. ANY DISTURBED AREA ON WHICH ACTIVITY HAS CEASED AND WHICH WILL REMAIN EXPOSED MUST BE SEEDED AND MULCHED IMMEDIATELY. DURING NON-GERMINATING PERIODS, MULCH MUST BE APPLIED AT THE RECOMMENDED RATES. DISTURBED AREAS WHICH ARE NOT AT FINISHED GRADE AND WHICH WILL BE REDISTURBED WITHIN 1 YEAR MAY BE SEEDED AND MULCHED WITH A QUICK GROWING TEMPORARY SEEDING MIXTURE AND MULCH. DISTURBED AREAS WHICH ARE EITHER AT FINISHED GRADE OF WILL NOT BE REDISTURBED WITHIN 1 YEAR MUST BE SEEDED AND MULCHED WITH A PERMANENT SEED MIXTURE AND MULCH.
2. SWALES, DETENTION BASINS, SEDIMENT TRAPS, STOCKPILES AND OTHER STRUCTURAL EROSION CONTROL DEVICES MUST BE SEEDED AND MULCHED IMMEDIATELY.

SOUTHEAST RAIN GARDEN MIX
ERNMX # ERNMX-180-2
SEEDING RATE 20 LB PER ACRE
MIX TYPE Storm Water Management Facility Sites

21% Beaked Panicgrass, SC Ecotype (Panicum anceps, SC Ecotype)
18% Little Bluestem, 'Camper' (Schizachyrium scoparium, 'Camper')
16% Virginia Wildrye, GA Ecotype (Elymus virginicus, GA Ecotype)
15% River Oats, Coastal Plain NC Ecotype (Chasmanthium latifolium (Uniola latifolia), Coastal Plain NC Ecotype)
4% Purple Coneflower (Echinacea purpurea)
4% Partridge Pea, FL Ecotype (Chamaecrista fasciculata (Cassia f.), FL Ecotype)
3% Blackeyed Susan, Coastal Plain NC Ecotype (Rudbeckia hirta, Coastal Plain NC Ecotype)
2% Greenwhite Sedge, Coastal Plain NC Ecotype (Carex albolutescens (C. longii), Coastal Plain NC Ecotype)
2% Mistflower, FL Ecotype (Eupatorium coelestinum (Conoclinium c.), FL Ecotype)
2% Slender Woodoats, NC Ecotype (Chasmanthium laxum (Uniola laxa), NC Ecotype)
1.5% Lanceleaf Coreopsis, Coastal Plain NC Ecotype (Coreopsis lanceolata, Coastal Plain NC Ecotype)
1.5% Largeflower Tickseed, Piedmont GA Ecotype (Coreopsis grandiflora, Piedmont GA Ecotype)
1% Tall Ironweed, SC Ecotype (Vernonia angustifolia, SC Ecotype)
1% Showy Aster, NC Ecotype (Aster spectabilis, NC Ecotype)
1% Spotted Beebalm, Coastal Plain SC Ecotype (Monarda punctata, Coastal Plain SC Ecotype)
1% Scaly Blazing Star, VA Ecotype (Liatris squarrosa, VA Ecotype)
1% White Wild Indigo, SC Ecotype (Baptisia albescens, SC Ecotype)
1% Leathery Rush, Coastal Plain NC Ecotype (Juncus coriaceus, Coastal Plain NC Ecotype)
1% Slender Bushclover, VA Ecotype (Lespedeza virginica, VA Ecotype)
1% Rattlesnakemaster, FL Ecotype (Eryngium yuccifolium, FL Ecotype)
1% Eustis Lake Beardtongue, 'Suther'-NC Ecotype (Penstemon australis, 'Suther'-NC Ecotype)
0.5% Gray Goldenrod, VA Ecotype (Solidago nemoralis, VA Ecotype)
0.5% Anise Goldenrod, GA Ecotype (Solidago odora, GA Ecotype)

Total: 100%

MEASURES FOR RECYCLING OR DISPOSAL OF MATERIALS

BEFORE DISPOSING OF SOIL OR RECEIVING BORROW FOR THE SITE, THE OPERATOR MUST ASSURE THAT EACH SUCH BORROW OR RECEIVING AREA HAS AN EROSION AND SEDIMENT CONTROL PLAN APPROVED BY THE COUNTY CONSERVATION DISTRICT AND WHICH IS BEING IMPLEMENTED AND MAINTAINED ACCORDING TO CHAPTER 102 REGULATIONS. ALL PAVING DEBRIS AND ROCKS REMOVE DURING FINAL LANDSCAPE RESTORATION SHALL BE COMPLETELY REMOVED FROM SITE AND DISPOSED OF IN THE PROPER MANNER. THERE SHALL BE NO ON-SITE BURIAL OR BURNING OF ANY MATERIAL.

LAND USE

EXISTING LAND USE IS INDUSTRIAL – RESEARCH AND DEVELOPMENT. THE LAND USE IN THE PAST 50 YEARS WAS AGRICULTURAL.

CRITICAL STAGES

A CRITICAL STAGE OF IMPLEMENTATION FOR WHICH A LICENSED PROFESSIONAL OR DESIGNEE WILL BE PRESENT ON SITE WILL BE FOR THE CONSTRUCTION OF THE DETENTION AND INFILTRATION BASINS AND THE UNDERGROUND INFILTRATION BASIN.

THERMAL IMPACTS

IT IS ANTICIPATED THAT THE INFILTRATION BMP'S WILL ACT TO ATTENUATE THERMAL IMPACTS.

GEOLOGIC FORMATIONS/SOIL CONDITIONS

THE SITE DOES NOT APPEAR TO HAVE NATURAL OCCURRING GEOLOGIC FORMATIONS OR SOIL CONDITIONS THAT MAY HAVE THE POTENTIAL TO CAUSE POLLUTION.

MEASURES FOR RECYCLING/DISPOSAL OF WASTES

BEFORE DISPOSING OF SOIL OR RECEIVING BORROW FOR THE SITE, THE OPERATOR MUST ASSURE THAT EACH SUCH BORROW OR RECEIVING AREA HAS AN EROSION AND SEDIMENT CONTROL PLAN APPROVED BY THE COUNTY CONSERVATION DISTRICT AND WHICH IS BEING IMPLEMENTED AND MAINTAINED ACCORDING TO CHAPTER 102 REGULATIONS. ALL PAVING DEBRIS AND ROCKS REMOVE DURING FINAL LANDSCAPE RESTORATION SHALL BE COMPLETELY REMOVED FROM SITE AND DISPOSED OF IN THE PROPER MANNER. THERE SHALL BE NO ON-SITE BURIAL OR BURNING OF ANY MATERIAL.

CONSTRUCTION WASTES EXPECTED TO BE CREATED DURING THE PROJECT CONSIST OF WOOD DEBRIS, OLD FILL MATERIAL, VEGETATIVE MATERIAL, EXCESS CONCRETE AND BUILDING MATERIAL.

DETENTION AND INFILTRATION BASINS AND AN UNDERGROUND INFILTRATION BASIN ARE THE BEST MANAGEMENT PRACTICES PROPOSED TO CONTROL STORM WATER RUNOFF AFTER CONSTRUCTION.

SOIL TYPES AND LIMITATIONS

SOILS TAKEN FROM THE SOIL SURVEY OF MONTGOMERY COUNTY, PENNSYLVANIA

MAP SYMBOL & SOIL NAME	STREETS/ROAD	LAWNS & LANDSCAPING	PONDS	
			RESERVOIR AREAS	EMBANKMENTS
UgD URBAN LAND				

RESOLUTION TO SOIL LIMITATIONS

FOR SOILS TO BE DISTURBED

MAP SYMBOL & SOIL NAME	STREETS/ROAD	LAWNS & LANDSCAPING	PONDS	
			RESERVOIR AREAS	EMBANKMENTS
UgD URBAN LAND	PUMP PONDED WATER TO SEDIMENT BASIN OR THROUGH A DIRT BAG	NO LIMITATIONS	NO LIMITATIONS	USE FOR CORE OF EMBANKMENT

SOIL SYMBOL	SOIL NAME	SLOPE (%)	DEPTH TO BEDROCK	DEPTH TO SEASONAL HIGH WATER TABLE	DRAINAGE CLASS RATING	LAND CAPABILITY	HYDROLOGIC SOIL GROUP	HYDRIC SOIL
UgD	URBAN LAND	8 TO 25	–	–	–	8s	C	NONHYDRIC

SOURCE: UNITED STATES DEPARTMENT OF AGRICULTURE, NATURAL RESOURCES CONSERVATION SERVICE "WEB SOIL SURVEY"

SEAL:

COMMONWEALTH OF PENNSYLVANIA REGISTERED PROFESSIONAL ENGINEER PETER C. ANDERSEN

ANDERSEN ENGINEERING ASSOCIATES INCORPORATED
306 NORTH FIFTH STREET, PERKASIE, PA
(215) 257-5711

FIELD BK/PG	AEA JOB NO.:	AEA FILE NO.:
-/-	5365	5365SITE

© 2004 THE GLAXOSMITHKLINE GROUP OF COMPANIES. ALL RIGHTS RESERVED. THIS DRAWING IS CONFIDENTIAL AND MAY NOT BE DISCLOSED, COPIED, ADAPTED OR REPRODUCED IN ANY FORM WHATSOEVER WITHOUT THE PRIOR WRITTEN CONSENT OF GLAXOSMITHKLINE.

NOTES | REFERENCE DRAWINGS | LEGEND

PAGE No.	DRAWING No.	TITLE

REVISION	DATE REVISED	CONTROL NUMBER

KEY PLAN

do more feel better live longer

UPPER MERION R&D FACILITIES
CAPITAL PROJECTS, ENGINEERING AND DESIGN
709 SWEDELAND ROAD
KING-OF-PRUSSIA, PA 19406
(610) 270-5261

SITE: UPPER MERION
BUILDING: CENTRAL UTILITIES PLANT
FLOOR:

Note: Previous Drawing Reference can be used for old drawing numbers or any previous reference that needs to be retained.

TITLE: PROPOSED CENTRAL UTILITIES PLANT (CUP) BUILDING

SHEET TITLE: POST CONSTRUCTION STORMWATER MANAGEMENT NOTES AND DETAILS

DRN BY:	DRN BY DATE:	FILE REFERENCE:
T.L.C.	10/27/16	5365SITE
CHKD BY: P.C.A.	CHKD BY DATE:	DRAWING STATUS:

PROJECT REF.:
SCALE @ E1: NOT TO SCALE
ORIGINAL CONTRACTOR DRAWING NO.(SEE NOTE ABOVE)
LEGACY GSK DRAWING DWG NO.(SEE NOTE ABOVE)
SHEET NO: 20 OF 21
GSK DRAWING NO.: 00-00-020
REV.:

C:\Projects\5365\5365SITE.dwg, PCSM DETAILS 1, 12/6/2016 11:48:16 AM, Spire

© 2004 THE GLAXOSMITHKLINE GROUP OF COMPANIES. ALL RIGHTS RESERVED. THIS DRAWING IS CONFIDENTIAL AND MAY NOT BE DISCLOSED, COPIED, ADAPTED OR REPRODUCED IN ANY FORM WHATSOEVER WITHOUT THE PRIOR WRITTEN CONSENT OF GLAXOSMITHKLINE.

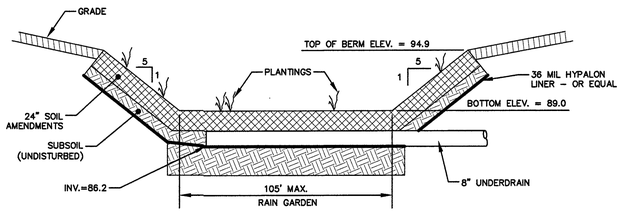

RAIN GARDEN CROSS SECTION DETAIL

NOT TO SCALE

BOTTOM OF BASIN – 89.0
100 YEAR STORAGE ELEVATION – 93.65
PROPOSED EMERGENCY SPILLWAY ELEVATION – 93.30

TOP BERM – 94.90
100 YEAR FLOW OVER SPILLWAY ELEV. – 93.82
FREEBOARD – 1.08'

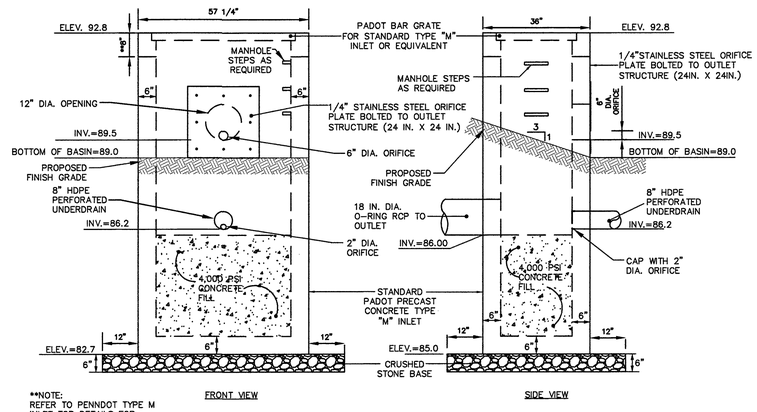

FRONT VIEW

SIDE VIEW

**NOTE:
REFER TO PENNDOT TYPE M INLET TOP DETAILS FOR REHABILITATION PROJECTS, RC-45M SHT. 18 OF 20

RAIN GARDEN OUTLET STRUCTURE DETAIL

NOT TO SCALE

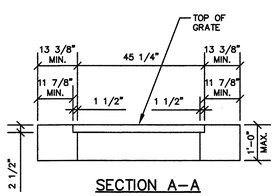

SECTION A–A

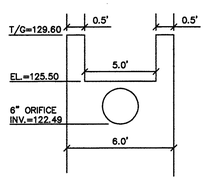

SECTION B–B

NOT TO SCALE

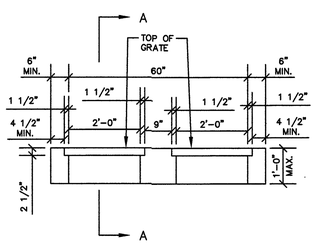

OUTLET WEIR TOP DETAIL

SCALE: 1/2"=1'-0"

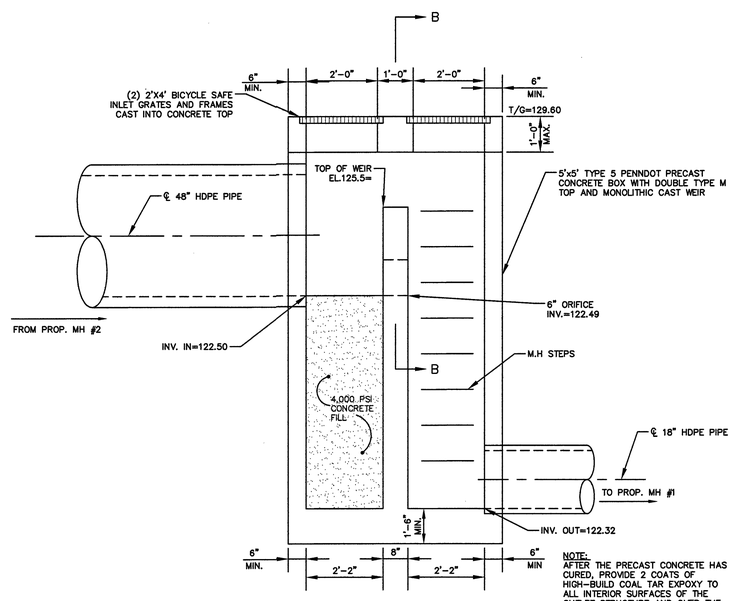

NOTE:
AFTER THE PRECAST CONCRETE HAS CURED, PROVIDE 2 COATS OF HIGH-BUILD COAL TAR EXPOXY TO ALL INTERIOR SURFACES OF THE OUTLET STRUCTURE AND OVER THE PIPE/PENETRATION GROUTING AFTER IT HAS CURED.

OUTLET WEIR DETAIL

NOT TO SCALE

NOTES | REFERENCE DRAWINGS | LEGEND

PAGE No.	DRAWING No.	TITLE

REVISION	DATE REVISED	CONTROL NUMBER

KEY PLAN

do more feel better live longer

UPPER MERION R&D FACILITIES
CAPITAL PROJECTS, ENGINEERING AND DESIGN
709 SWEDELAND ROAD
KING-OF-PRUSSIA, PA 19406
(610) 270-5261

SITE: UPPER MERION
BUILDING: CENTRAL UTILITIES PLANT
FLOOR:

Note: Previous Drawing Reference can be used for old drawing numbers or any previous reference that needs to be retained.

TITLE: PROPOSED CENTRAL UTILITIES PLANT (CUP) BUILDING

SHEET TITLE: POST CONSTRUCTION STORMWATER MANAGEMENT DETAILS

DRN BY:	DRN BY DATE:	FILE REFERENCE:
T.L.C.	10/27/16	5365SITE
CHKD BY: P.C.A.	CHKD BY DATE:	DRAWING STATUS:

PROJECT REF.:
SCALE @ E1: NOT TO SCALE
ORIGINAL CONTRACTOR DRAWING NO.(SEE NOTE ABOVE)
LEGACY GSK DRAWING DWG NO.(SEE NOTE ABOVE)
SHEET NO: 21 OF 21
GSK DRAWING NO.: 00-00-021
REV.:

SEAL: CONSULTING ENGINEERS PROFESSIONAL ENGINEER PETER C. ANDERSEN

ANDERSEN ENGINEERING ASSOCIATES INCORPORATED
306 NORTH FIFTH STREET, PERKASIE, PA
(215) 257-5711

FIELD BK/PG	AEA JOB NO.:	AEA FILE NO.:
–/–	5365	5365SITE

C:\Projects\5365\5365SITE.dwg, PCOM DETAILS 2, 10/14/2016 4:47:51 PM, Spare